ROHDE&SCHWARZ

DOCUMENTATION

DOCUMENTATION

DOCUMENTATION

DOCUMENTATION

DOCUMENTATION

DOCUMENTATION

DOCUMENTATION

DOCUMENTATION

DOCUMENTATION

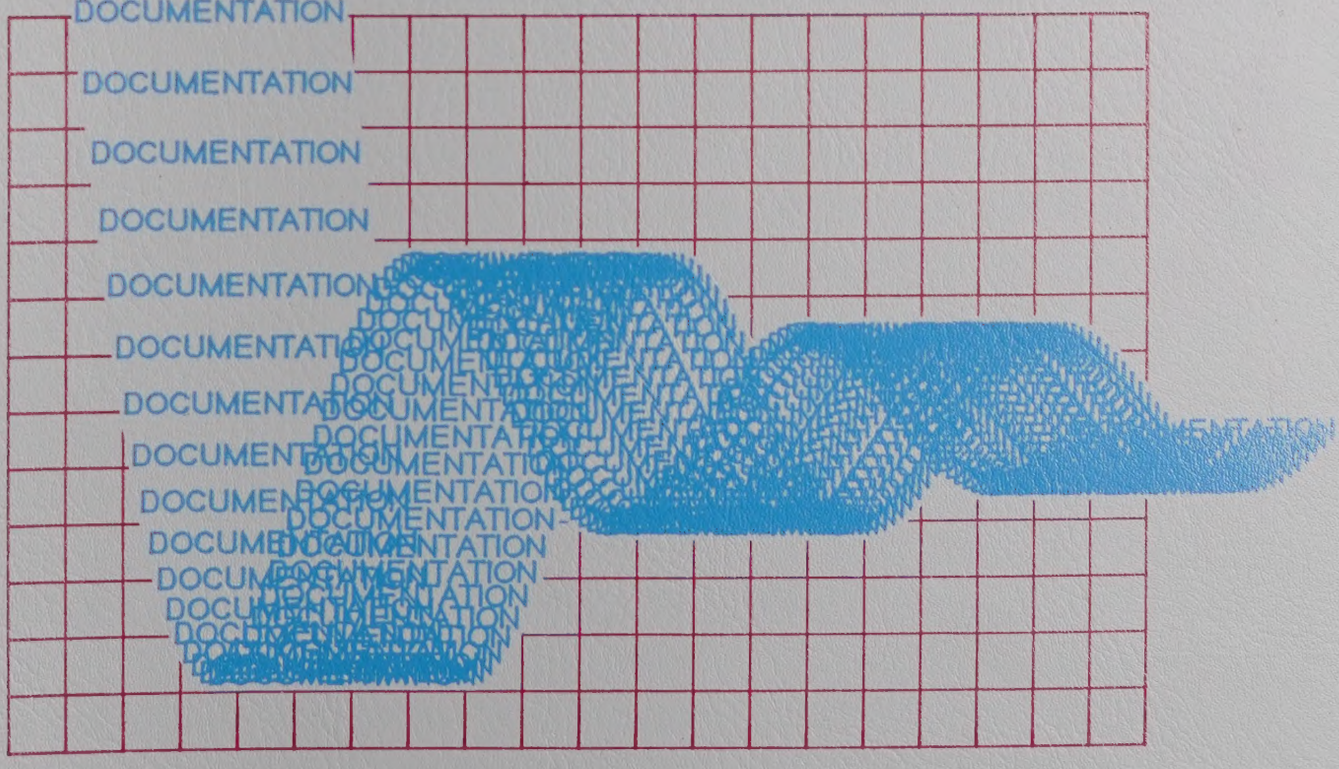

Service Manual Instruction

# Universal Radio Communication Tester

# CMU200/CMU300

ROHDE&SCHWARZ

Test and Measurement
Division

# Service Manual Instrument

# Universal Radio Communication Tester

# CMU200/CMU300

**1100.0008.02/1100.0008.03**

Printed in the Federal
Republic of Germany

## Certificate of quality

Dear Customer,

You have decided to buy a Rohde & Schwarz product. You are thus assured of acquiring a product that is manufactured using the most modern methods available. This product was developed, manufactured and tested in compliance with our quality management system standards. The Rohde & Schwarz quality management system is certified according to standards such as ISO 9001 and ISO 14001.

ROHDE&SCHWARZ

## Qualitätszertifikat

Sehr geehrter Kunde,

Sie haben sich für den Kauf eines Rohde & Schwarz-Produktes entschieden. Hiermit erhalten Sie ein nach modernsten Fertigungsmethoden hergestelltes Produkt. Es wurde nach den Regeln unseres Qualitätsmanagementsystems entwickelt, gefertigt und geprüft. Das Rohde & Schwarz-Qualitätsmanagementsystem ist u.a. nach ISO 9001 und ISO 14001 zertifiziert.

## Certificate of quality

Dear Customer,

You have decided to buy a Rohde & Schwarz product. You are thus assured of receiving a product that is manufactured using the most modern methods available. This product was developed, manufactured and tested in compliance with our quality management system standards. The Rohde & Schwarz quality management system is certified according to standards such as ISO 9001 and ISO 14001.

## Certificat de qualité

Cher client,

Vous avez choisi d'acheter un produit Rohde & Schwarz. Vous disposez donc d'un produit fabriqué d'après les méthodes les plus avancées. Le développement, la fabrication et les tests respectent nos normes de gestion qualité. Le système de gestion qualité de Rohde & Schwarz a été homologué, entre autres, conformément aux normes ISO 9001 et ISO 14001.

ROHDE&SCHWARZ

# Manuals for Universal Radio Communication Tester CMU

Chapter 1: Performance Test

Chapter 2: Adjustment

Chapter 3: Repair

Chapter 4: Software Update

Chapter 5: Documents

# Tabbed Divider Overview

Spare Parts Express Service
List of R&S Representatives
Safety Instructions

## Contents

Contents of Manuals for Universal Radio Communication Tester CMU

Tabbed Divider

1 Chapter 1: Performance Test

2 Chapter 2: Adjustment

3 Chapter 3: Repair

4 Chapter 4: Software Update / Installation of Options

5 Chapter 5: Documents

Index

Phone: +49 89 41 29 [illegible]

Fax: +49 89 41 29 -[illegible]

E-mail: werner.breidling@[illegible]

# Spare Parts Express Service


**Phone:** +49 89 4129 - 2465

**Fax:** +49 89 41 29 - 3306

**E-mail:** werner.breidling@RSD.rsd.de


In case of urgent spare parts requirements for this Rohde & Schwarz unit, please contact our spare parts express service.

Outside business hours, please leave us a message or send a fax or e-mail. We shall contact you promptly.

# Addresses

# Adressen/Addresses

**FIRMENSITZ/HEADQUARTERS**

| | Phone<br>Fax<br>E-mail |
|---|---|
| Rohde & Schwarz GmbH & Co. KG<br>Mühldorfstraße 15 · D-81671 München<br>Postfach 80 14 69 · D-81614 München | +49 (89) 41 29-0<br>+49 89 4129-121 64<br>info@rohde-schwarz.com |

**WERKE/PLANTS**

| | |
|---|---|
| Rohde & Schwarz Messgerätebau GmbH<br>Riedbachstraße 58 · D-87700 Memmingen<br>Postfach 1652 · D-87686 Memmingen | +49 (8331) 108-0<br>+49 (8331) 108-11 24<br>info.rsmb@rohde-schwarz.com |
| Rohde & Schwarz GmbH & Co. KG<br>Werk Teisnach<br>Kaikenrieder Straße 27 · D-94244 Teisnach<br>Postfach 1149 · D-94240 Teisnach | +49 (9923) 857-0<br>+49 (9923) 857-11 74<br>info.rsts@rohde-schwarz.com |
| Rohde & Schwarz GmbH & Co. KG<br>Dienstleistungszentrum Köln<br>Graf-Zeppelin-Straße 18 · D-51147 Köln<br>Postfach 98 02 60 · D-51130 Köln | +49 (2203) 49-0<br>+49 (2203) 49 51-308<br>info.rsdc@rohde-schwarz.com<br>service.rsdc@rohde-schwarz.com |

**TOCHTERUNTERNEHMEN/SUBSIDIARIES**

| | |
|---|---|
| Rohde & Schwarz Vertriebs-GmbH<br>Mühldorfstraße 15 · D-81671 München<br>Postfach 80 14 69 · D-81614 München | +49 (89) 41 29-137 74<br>+49 (89) 41 29-137 77 |
| Rohde & Schwarz International GmbH<br>Mühldorfstraße 15 · D-81671 München<br>Postfach 80 14 60 · D-81614 München | +49 (89) 41 29-129 84<br>+49 (89) 41 29-120 50<br>info.rsi@rohde-schwarz.com |
| Rohde & Schwarz Engineering and Sales GmbH<br>Mühldorfstraße 15 · D-81671 München<br>Postfach 80 14 29 · D-81614 München | +49 (89) 41 29-137 11<br>+49 (89) 41 29-137 23<br>info.rse@rohde-schwarz.com |
| Rohde & Schwarz BICK Mobilfunk GmbH<br>Fritz-Hahne-Str. 7 · D-31848 Bad Münder<br>Postfach 2062 · D-31844 Bad Münder | +49 (5042) 998-0<br>+49 (5042) 998-105<br>info.bick@rohde-schwarz.com |
| Rohde & Schwarz FTK GmbH<br>Wendenschlossstraße 168, Haus 28<br>D-12557 Berlin | +49 (30) 658 91-122<br>+49 (30) 655 50-221<br>info.ftk@rohde-schwarz.com |
| Rohde & Schwarz SIT GmbH<br>Agastraße 3<br>D-12489 Berlin | +49 (30) 658 84-0<br>+49 (30) 658 84-183<br>info.sit@rohde-schwarz.com |

**ADRESSEN WELTWEIT/ADDRESSES WORLDWIDE**

| | | |
|---|---|---|
| **Albania** | siehe/see Austria | |
| **Algeria** | Rohde & Schwarz<br>Bureau d'Alger<br>5B Place de Laperrine<br>16035 Hydra-Alger | +213 (21) 48 20 18<br>+213 (21) 69 46 08 |
| **Argentina** | Precision Electronica S.R.L.<br>Av. Pde Julio A. Roca 710 - 6° Piso<br>(C1067ABP) Buenos Aires | +541 (14) 331 41 99<br>+541 (14) 334 51 11<br>alberto_lombardi@prec-elec.com.ar |
| **Australia** | Rohde & Schwarz (Australia) Pty. Ltd.<br>Sales Support<br>Unit 6<br>2-8 South Street<br>Rydalmere, N.S.W. 2116 | +61 (2) 88 45 41 00<br>+61 (2) 96 38 39 88<br>lyndell.james@rsaus.rohde-schwarz.com |
| **Austria** | Rohde & Schwarz-Österreich Ges.m.b.H.<br>Am Europlatz 3<br>Gebäude B<br>1120 Wien | +43 (1) 602 61 41-0<br>+43 (1) 602 61 41-14<br>rs-austria@rsoe.rohde-schwarz.com |
| **Azerbaijan** | Rohde & Schwarz Azerbaijan<br>Liaison Office Baku<br>ISR Plaza<br>340 Nizami Str.<br>370000 Baku | +994 (12) 93 31 38<br>+994 (12) 93 03 14<br>rs-azerbaijan@rus.rohde-schwarz.com |
| **Baltic Countries** | siehe/see Denmark | |
| **Bangladesh** | BIL Consortium Ltd.<br>Corporate Office<br>House-33, Road-4, Block-F<br>Banani<br>Dhaka-1213 | +880 (2) 881 06 53<br>+880 (2) 882 82 91 |
| **Belgium** | Rohde & Schwarz Belgium N.V.<br>Excelsiorlaan 31 Bus 1<br>1930 Zaventem | +32 (2) 721 50 02<br>+32 (2) 725 09 36<br>info@rsb.rohde-schwarz.com |
| **Bosnia-Herzegovina** | siehe/see Slovenia | |
| **Brazil** | Rohde & Schwarz Do Brasil Ltda.<br>Av. Alfredo Egidio de Souza Aranha n° 177,<br>1° andar - Santo Amaro<br>04726-170 Sao Paulo - SP | +55 (11) 56 44 86 11 (general)<br>+55 (11) 56 44 86 25 (sales)<br>+55 (11) 56 44 86 36<br>sales-brazil@rsdb.rohde-schwarz.com |
| **Brunei** | GKL Equipment Pte Ltd.<br>#11-01 BP Tower<br>396 Alexandra Road<br>Singapore 119954 | +65 (6) 276 06 26<br>+65 (6) 276 06 29<br>gkleqpt@singnet.com.sg |
| **Bulgaria** | Rohde & Schwarz<br>Representation Office Bulgaria<br>39, Fridtjof Nansen Blvd.<br>1000 Sofia | +359 (2) 96 343 34<br>+359 (2) 96 321 97<br>rs-bulgaria@rsbg.rohde-schwarz |
| **Canada** | Rohde & Schwarz Canada Inc.<br>555 March Rd.<br>Kanata, Ontario K2K 2M5 | +1 (613) 592 80 00<br>+1 (613) 592 80 09<br>cgirwarnauth@rscanada.ca |
| | Tektronix Canada Inc.<br>Test and Measurement<br>4929 Place Olivia<br>Saint-Laurent, Pq<br>Montreal H4R 2V6 | +1 (514) 331 43 34<br>+1 (514) 331 59 91 |
| **Chile** | Dymeq Ltda.<br>Av. Larrain 6666<br>Santiago | +56 (2) 339 20 00<br>+56 (2) 339 20 10<br>dymeq@dymeq.com |
| **China** | Rohde & Schwarz China Ltd.<br>Representative Office Beijing<br>Room 602, Parkview Center<br>2 Jiangtai Road<br>Chao Yang District<br>Beijing 100016 | +86 (10) 64 31 28 28<br>+86 (10) 64 37 98 88<br>info.rschina@rsbp.rohde-schwarz.com |
| | Rohde & Schwarz China Ltd.<br>Representative Office Shanghai<br>Central Plaza<br>227 Huangpi North Road<br>RM 807/809<br>Shanghai 200003 | +86 (21) 63 75 00 18<br>+86 (21) 63 75 91 70 |
| | Rohde & Schwarz China Ltd.<br>Representative Office Guangzhou<br>Room 2903, Metro Plaza<br>183 Tianhe North Road<br>Guangzhou 510075 | +86 (20) 87 55 47 58<br>+86 (20) 87 55 47 59 |
| | Rohde & Schwarz China Ltd.<br>Representative Office Chengdu<br>Unit G, 28/F, First City Plaza<br>308 Shuncheng Avenue<br>Chengdu 610017 | +86 (28) 86 52 76 05 to 09<br>+86 (28) 86 52 76 10<br>rsbpc@mail.sc.cninfo.net |
| | Rohde & Schwarz China Ltd.<br>Representative Office Xi'an<br>Room 10125, Jianguo Hotel Xi'an<br>No. 2, Huzhu Road<br>Xi'an 710048 | +86 (29) 321 82 33<br>+86 (29) 329 60 15<br>sherry.yu@rsbp.rohde-schwarz.com |

# Adressen/Addresses

| | | |
|---|---|---|
| **China** | Rohde & Schwarz China Ltd.<br>Representative Office Shenzhen<br>No. 2002 Jiabin Road<br>Luohu District<br>Shenzhen 518001 | +86 (755) 25 18 50 18<br>+86 (755) 25 18 50 18<br>jessica.lia@rsbp.rohde-schwarz.com |
| **Croatia** | siehe/see Slovenia | |
| **Cyprus** | Hinis Telecast Ltd.<br>Agiou Thoma 18<br>Kiti<br>Larnaca 7550 | +357 (24) 42 51 78<br>+357 (24) 42 46 21<br>hinis@logos.cy.net |
| **Czech Republic** | Rohde & Schwarz Praha s.r.o.<br>Hadovka Office Park<br>Evropská 33c<br>16000 Praha 6 | +420 (2) 24 31 12 32<br>+420 (2) 24 31 70 43<br>office@rscz.rohde-schwarz.com |
| **Denmark** | Rohde & Schwarz Danmark A/S<br>Ejby Industrivej 40<br>2600 Glostrup | +45 (43) 43 66 99<br>+45 (43) 43 77 44 |
| **Ecuador** | Representaciones Manfred Weinzierl<br>Vía Láctea No. 4 y Via Sta. Inés<br>P.O.Box 17-22-20309<br>1722 Cumbayá-Quito | +593 (22) 89 65 97<br>+593 (22) 89 65 97<br>mweinzierl@plus.net.ec |
| **Egypt** | U.A.S. Universal Advanced Systems<br>31 Manshiet El-Bakry Street<br>Heliopolis<br>11341 Cairo | +20 (2) 455 67 44<br>+20 (2) 256 17 40<br>an_uas@link.net |
| **El Salvador** | siehe/see Mexico | |
| **Estonia** | Rohde & Schwarz Danmark A/S<br>Estonian Branch Office<br>Narva mnt. 13<br>10151 Tallinn | +372 (6) 14 31 23<br>+372 (6) 14 31 21<br>margo.fingling@rsdk.rohde-schwarz.com |
| **Finland** | Orbis Oy<br>P.O.Box 15<br>00421 Helsinki 42 | +358 (9) 47 88 30<br>+358 (9) 53 16 04<br>info@orbis.fi |
| **France** | Rohde & Schwarz France<br>Immeuble "Le Newton"<br>9-11, rue Jeanne Braconnier<br>92366 Meudon La Forêt Cédex | +33 (1) 41 36 10 00<br>+33 (1) 41 36 11 73<br>contact@rsf.rohde-schwarz.com |
| | Niederlassung/Subsidiary Rennes<br>37 Rue du Bignon<br>Bât. A<br>F-35510 Cesson Sevigne | +33 (0) 299 51 97 00<br>+33 (0) 299 51 98 77 |
| | Niederlassung/Subsidiary Toulouse<br>Technoparc 3<br>B.P. 501<br>F-31674 Labège Cédex | +33 (0) 561 39 10 69<br>+33 (0) 561 39 99 10 |
| | Office Aix-en-Provence | +33 (0) 494 07 39 94<br>+33 (0) 494 07 55 11 |
| | Office Lyon | +33 (0) 478 29 88 10<br>+33 (0) 478 79 18 57 |
| | Office Nancy | +33 (0) 383 54 51 29<br>+33 (0) 383 54 82 09 |
| **Germany** | Zweigniederlassungen der Rohde & Schwarz Vertriebs-GmbH/Branch offices of Rohde & Schwarz Vertriebs-GmbH | |
| | Zweigniederlassung Nord, Geschäftsstelle Berlin<br>Ernst-Reuter-Platz 10 · D-10587 Berlin<br>Postfach 100620 · D-10566 Berlin | +49 (30) 34 79 48-0<br>+49 (30) 34 79 48 48<br>info.rsv@rohde-schwarz.com |
| **Germany** | Zweigniederlassung Büro Bonn<br>Josef-Wirmer-Straße 1-3 · D-53123 Bonn<br>Postfach 140264 · D-53057 Bonn | +49 (228) 918 90-0<br>+49 (228) 25 50 87<br>info.rsv@rohde-schwarz.com |
| | Zweigniederlassung Nord, Geschäftsstelle Hamburg<br>Steilshooper Alle 47 · D-22309 Hamburg<br>Postfach 60 22 40 · D-22232 Hamburg | +49 (40) 63 29 00-0<br>+49 (40) 630 78 70<br>info.rsv@rohde-schwarz.com |
| | Zweigniederlassung Mitte, Geschäftsstelle Köln<br>Niederkasseler Straße 33 · D-51147 Köln<br>Postfach 900 149 · D-51111 Köln | +49 (2203) 807-0<br>+49 (2203) 807-650<br>info.rsv@rohde-schwarz.com |
| | Zweigniederlassung Süd, Geschäftsstelle München<br>Mühldorfstraße 15 · D-81671 München<br>Postfach 80 14 69 · D-81614 München | +49 (89) 41 86 95-0<br>+49 (89) 40 47 64<br>info.rsv@rohde-schwarz.com |
| | Zweigniederlassung Süd, Geschäftsstelle Nürnberg<br>Donaustraße 36<br>D-90451 Nürnberg | +49 (911) 642 03-0<br>+49 (911) 642 03-33<br>info.rsv@rohde-schwarz.com |
| | Zweigniederlassung Mitte, Geschäftsstelle Neu-Isenburg<br>Siemensstraße 20<br>D-63263 Neu-Isenburg | +49 (6102) 20 07-0<br>+49 (6102) 20 07 12<br>info.rsv@rohde-schwarz.com |
| **Ghana** | Kop Engineering Ltd.<br>P.O. Box 11012<br>3rd Floor Akai House, Osu<br>Accra North | +233 (21) 77 89 13<br>+233 (21) 701 06 20 |
| **Greece** | Mercury S.A.<br>6, Loukianou Str.<br>10675 Athens | +302 (10) 722 92 13<br>+302 (10) 721 51 98<br>mercury@hol.gr |
| **Guatemala** | siehe/see Mexico | |
| **Honduras** | siehe/see Mexico | |
| **Hong Kong** | Electronic Scientific Engineering<br>9/F North Somerset House<br>Taikoo Place<br>979 King's Road<br>Hong Kong | +852 (25) 07 03 33<br>+852 (25) 07 09 25<br>stephenchau@ese.com.hk |
| **Hungary** | Rohde & Schwarz<br>Budapesti Iroda<br>Váci út 169<br>1138 Budapest | +36 (1) 412 44 60<br>+36 (1) 412 44 61<br>rs-hungary@rshu.rohde-schwarz.com |
| **Iceland** | siehe/see Denmark | |
| **India** | Rohde & Schwarz India Pvt. Ltd.<br>Bangalore Office<br>No. 24, Service Road, Domlur<br>2nd Stage Extension<br>Bangalore - 560 071 | +91 (80) 535 23 62<br>+91 (80) 535 03 61<br>rsindiab@rsnl.net |
| **India** | Rohde & Schwarz India Pvt. Ltd.<br>Hyderabad Office<br>302 & 303, Millenium Centre<br>6-3-1099/1100, Somajiguda<br>Hyderabad - 500 016 | +91 (40) 23 32 24 16<br>+91 (40) 23 32 27 32<br>rsindiah@nd2.dot.net.in |
| **India** | Rohde & Schwarz India Pvt. Ltd.<br>RS India Mumbai Office<br>B-603, Remi Bizcourt, Shah Industrial Estate, Off Veera Desai Road<br>Mumbai - 400 058 | +91 (22) 26 30 18 10<br>+91 (22) 26 73 20 81<br>rsindiam@rsnl.net |
| **Indonesia** | PT Rohde & Schwarz Indonesia<br>Graha Paramita 5th Floor<br>Jln. Denpasar Raya Blok D-2<br>Jakarta 12940 | +62 (21) 252 36 08<br>+62 (21) 252 36 07<br>sales@rsbj.rohde-schwarz.com<br>services@rsbj.rohde-schwarz.com |

# Adressen/Addresses

**Iran**
Rohde & Schwarz Iran
Groundfloor No. 1, 14th Street
Khaled Eslamboli (Vozara) Ave.
15117 Tehran
+98 (21) 872 42 96
+98 (21) 871 90 12
rs-tehran@neda.net

**Ireland**
siehe/see United Kingdom

**Israel**
Eastronics Ltd.
Messtechnik/T&M Equipment
11 Rozanis St.
P.O.Box 39300
Tel Aviv 61392
+972 (3) 645 87 77
+972 (3) 645 86 66
david_hasky@easx.co.il

J.M. Moss (Engineering) Ltd.
Kommunikationstechnik/ Communications Equipment
9 Oded Street
P.O.Box 967
52109 Ramat Gan
+972 (3) 631 20 57
+972 (3) 631 40 58
jmmoss@zahav.net.il

**Italy**
Rohde & Schwarz Italia S.p.a.
Centro Direzionale Lombardo
Via Roma 108
20060 Cassina de Pecchi (MI)
+39 (02) 95 70 42 03
+39 (02) 95 30 27 72
ornella.crippa@rsi.rohde-schwarz.com

Rohde & Schwarz Italia S.p.a.
Via Tiburtina 1182
00156 Roma
+39 (06) 41 59 82 18
+39 (06) 41 59 82 70

**Japan**
Rohde & Schwarz
Support Center Japan K.K.
711 bldg., Room 501 (5th floor)
7-11-18 Nishi-Shinjuku
Shinjuku-ku
Tokyo 160-0023
+81 (3) 59 25 12 88
+81 (3) 59 25 12 90

Advantest Corp.
Sales Promotion Department
Shinjuku-NS bldg.
2-4-1, Nishi-Shinjuku
Shinjuku-ku
Tokyo 160-0880
+81 (3) 33 42 75 52
+81 (3) 53 22 72 70
mkoyama@ns.advantest.co.jp

**Jordan**
Jordan Crown Engineering & Trading Co.
Jabal Amman, Second Circle
Youssef Ezzideen Street
P.O.Box 830414
Amman, 11183
+962 (6) 462 17 29
+962 (6) 465 96 72
jocrown@go.com.jo

**Kazakhstan**
Rohde & Schwarz Kazakhstan
Representative Office Almaty
Pl. Respubliki 15
480013 Almaty
+7 (32) 72 67 23 54
+7 (32) 72 67 23 46
rs-kazakhstan@rus-rohde-schwarz.com

**Kenya**
Excel Enterprises Ltd
Dunga Road
P.O.Box 42 788
Nairobi
+254 (2) 55 80 88
+254 (2) 54 46 79

**Korea**
Rohde & Schwarz Korea Ltd.
83-29 Nonhyun-Dong, Kangnam-Ku
Seoul 135-010
+82 (2) 3485 1900
+82 (2) 3485 1900
sales@rskor.rohde-schwarz.com
service@rskor.rohde-schwarz.com

**Kuwait**
Group Five Trading & Contracting Co.
Mezanine Floor
Al-Bana Towers
Ahmad Al Jaber Street
Sharq
+965 (244) 91 72/73/74
+965 (244) 95 28
jk_agarwal@yahoo.com

**Latvia**
Rohde & Schwarz Danmark A/S
Latvian Branch Office
Merkela iela 21-301
1050 Riga
+371 (7) 50 23 55
+371 (7) 50 23 60
rsdk@rsdk.rohde-schwarz.com

**Lebanon**
Rohde & Schwarz
Liaison Office Riyadh
P.O.Box 361
Riyadh 11411
+966 (1) 465 64 28 Ext. 303
+966 (1) 465 64 28 Ext. 229
chris.porzky@rsd.rohde-schwarz.com

**Lebanon**
Netcom
P.O.Box 55199
Op. Ex-Presidential Palace
Horsh Tabet
Beirut
+961-1-48 69 99
+961-1-49 05 11
netcom@inco.com.lb

**Liechtenstein**
siehe/see Switzerland

**Lithuania**
Rohde & Schwarz Danmark A/S
Lithuanian Office
Lukiskiu 5-228
2600 Vilnius
+370 (5) 239 50 10
+370 (5) 239 50 11

**Luxembourg**
siehe/see Belgium

**Macedonia**
siehe/see Slovenia

**Malaysia**
Dagang Teknik Sdn. Bhd.
No. 9, Jalan SS 4D/2
Selangor Darul Ehsan
47301 Petaling Jaya
+60 (3) 27 03 55 68
+60 (3) 27 03 34 39
maryanne@danik.com.my

**Malta**
ITEC International Technology Ltd
B'Kara Road
San Gwann SGN 08
+356 (21) 37 43 00 or 37 43 29
+356 (21) 37 43 53
sales@itec.com.mt

**Mexico**
Rohde & Schwarz de Mexico
Av. Prol. Americas No. 1600, 2° Piso
Col. Country Club
Guadalajara, Jal.
Mexico CP, 44610
+52 (33) 36 78 91 70
+52 (33) 36 78 92 00

Rohde & Schwarz de Mexico
S. de R.L. de C.V.
German Centre Oficina 4-2-2
Av. Santa Fé 170
Col. Lomas de Santa Fé
01210 Mexico D.F.
+52 (55) 85 03 99 13
+52 (55) 85 03 99 16
latinoamerica@rsd.rohde-schwarz.com

**Moldavia**
siehe/see Romania

**Nepal**
ICTC Pvt. Ltd.
Hattisar, Post Box No. 660
Kathmandu
+977 (1) 443 48 95
+977 (1) 443 49 37
ictc@mos.com.np

**Netherlands**
Rohde & Schwarz Nederland B.V.
Perkinsbaan 1
3439 ND Nieuwegein
+31 (30) 600 17 00
+31 (30) 600 17 99
info@rsn.rohde-schwarz.com

**New Zealand**
Nichecom
1 Lincoln Ave.
Tawa, Wellington
+64 (4) 232 32 33
+64 (4) 232 32 30
rob@nichecom.co.nz

**Nicaragua**
siehe/see Mexico

**Nigeria**
Ferrostaal Abuja
Plot 3323, Barada Close
P.O.Box 8513, Wuse
Off Amazon Street
Maitama, Abuja
+234 (9) 413 52 51
+234 (9) 413 52 50
fsabuja@rosecom.net

**Norway**
Rohde & Schwarz Norge AS
Enebakkveien 302 B
1188 Oslo
+47 (23) 38 66 00
+47 (23) 38 66 01

**Oman**
Mustafa Sultan Science & Industry Co.LLC.
Test & Measurement Products
Way No. 3503
Building No. 241
Postal Code 112
Al Khuwair, Muscat
+968 63 60 00
+968 60 70 66
m-aziz@mustafasultan.com

**Pakistan**
Siemens Pakistan
23, West Jinnah Avenue
Islamabad
+92 (51) 227 22 00
+92 (51) 227 54 98
reza.bokhary@siemens.com.pk

# Adressen/Addresses

| | | |
|---|---|---|
| **Panama** | siehe/see Mexico | |
| **Papua New Guinea** | siehe/see Australia | |
| **Philippines** | Rohde & Schwarz (Philippines) Ltd.<br>PBCom Tower<br>Ayala Ave. cor. Herrera Sts.<br>Makati City | +63 (2) 755 88 70<br>+63 (2) 755 88 67 |
| **Poland** | Rohde & Schwarz SP.z o.o.<br>Przedstawicielstwo w Polsce<br>ul. Stawki 2, Pietro 28<br>00-193 Warszawa | +48 (22) 860 64 94<br>+48 (22) 860 64 99<br>rs-poland@rspl.rohde-schwarz.com |
| **Portugal** | Rohde & Schwarz Portugal, Lda.<br>Alameda Antonio Sergio<br>7-R/C - Sala A<br>2795-023 Linda-a-Velha | +351 (21) 415 57 00<br>+351 (21) 415 57 10<br>info@rspt.rohde-schwarz.com |
| **Romania** | Rohde & Schwarz<br>Representation Office Bucharest<br>Str. Uranus 98<br>Sc. 2, Et. 5, Ap. 36<br>76102 Bucuresti, Sector 5 | +40 (21) 410 68 46<br>+40 (21) 411 20 13<br>rs-romania@rsro.rohde-schwarz.com |
| **Russian Federation** | Rohde & Schwarz<br>Representative Office Moscow<br>119180, Yakimanskaya nab., 2<br>Moscow | +7 (095) 745 88 50 to 53<br>+7 (095) 745 88 54<br>rs-russia@rsru.rohde-schwarz.com |
| **Saudi Arabia** | Rohde & Schwarz Liaison Office Riyadh<br>c/o Haji Abdullah Alireza Co. Ltd.<br>P.O.Box 361<br>Riyadh 11411 | +966 (1) 465 64 28 Ext. 303<br>+966 (1) 465 6428 Ext. 229<br>chris.porzky@rsd.rohde-schwarz.com |
| **Saudi Arabia** | Gentec<br>Haji Abdullah Alireza & Co. Ltd.<br>P.O.Box 43054<br>Riyadh | +966 (1) 465 64 28<br>+966 (1) 465-64 28<br>akanbar@gentec.com.sa |
| **Serbia-Montenegro** | Representative Office Belgrade<br>Tose Jovanovica 7<br>11030 Beograd | +381 (11) 305 50 25<br>+381 (11) 305 50 24 |
| **Singapore** | Rohde & Schwarz<br>Regional Headquarters Singapore Pte. Ltd.<br>1 Kaki Bukit View<br>#05-01/02 Techview<br>Singapore 415 941 | +65 (6) 846 1872<br>+65 (6) 846 1252<br>rsca@rssg.rohde-schwarz.com |
| **Slovak Republic** | Specialne systemy a software, a.s.<br>Svrcia ul.<br>841 04 Bratislava | +421 (2) 65 42 24 88<br>+421 (2) 65 42 07 68<br>stefan.lozek@special.sk |
| **Slovenia** | Rohde & Schwarz<br>Representation Ljubljana<br>Tbilisijska 89<br>1000 Ljubljana | +386 (1) 423 46 51<br>+386 (1) 423 46 11<br>rs-slovenia@rssi.rohde-schwarz.com |
| **South Africa** | Protea Data Systems (Pty.) Ltd.<br>Communications and Measurement Division<br>Private Bag X19<br>Bramley 2018 | +27 (11) 719 57 00<br>+27 (11) 786 58 91<br>unicm@protea.co.za |
| **South Africa** | Protea Data Systems (Pty.) Ltd.<br>Cape Town Branch<br>Unit G9, Centurion Business Park<br>Bosmandam Road<br>Milnerton<br>Cape Town, 7441 | +27 (21) 555 36 32<br>+27 (21) 555 42 67<br>unicm@protea.co.za |
| **Spain** | Rohde & Schwarz Espana S.A.<br>Salcedo, 11<br>28034 Madrid | +34 (91) 334 10 70<br>+34 (91) 329 05 06<br>rses@rses.rohde-schwarz.com |
| **Sri Lanka** | Dynatel Communications (PTE) Ltd.<br>451/A Kandy Road<br>Kelaniya | +94 (1) 90 80 01<br>+94 (1) 91 04 69<br>dyna-svc@sltnet.lk |
| **Sudan** | SolarMan Co. Ltd.<br>P.O.Box 11 545<br>North of Fraouq Cementry 6/7/9 Bldg. 16<br>Karthoum | +249 (11) 47 31 08<br>+249 (11) 47 31 38<br>solarman29@hotmail.com |
| **Sweden** | Rohde & Schwarz Sverige AB<br>Marketing Div.<br>Flygfältsgatan 15<br>128 30 Skarpnäck | +46 (8) 605 19 00<br>+46 (8) 605 19 80<br>info@rss.se |
| **Switzerland** | Roschi Rohde & Schwarz AG<br>Mühlestr. 7<br>3063 Ittigen | +41 (31) 922 15 22<br>+41 (31) 921 81 01<br>sales@roschi.rohde-schwarz.com |
| **Syria** | Electro Scientific Office<br>Baghdad Street<br>Dawara Clinical Lab. Bldg<br>P.O.Box 8162<br>Damascus | +963 (11) 231 59 74<br>+963 (11) 231 88 75<br>memo@hamshointl.com |
| **Taiwan** | Rohde & Schwarz Taiwan (Pvt.) Ltd.<br>Floor 14, No. 13, Sec. 2, Pei-Tou Road<br>Taipei 112 | +886 (2) 28 93 10 88<br>+886 (2) 28 91 72 60<br>celine.tu@rstw.rohde-schwarz.com |
| **Tanzania** | SSTL Group<br>P.O. Box 7512<br>Dunga Street Plot 343/345<br>Dar es Salaam | +255 (22) 276 00 37<br>+255 (22) 276 02 93<br>sstl@ud.co.tz |
| **Thailand** | Schmidt Electronics (Thailand) Ltd.<br>63 Government Housing Bank Bldg.<br>Tower II, 19th floor, Rama 9 Rd.<br>Huaykwang, Bangkapi<br>Bangkok 10320 | +66 (2) 643 13 30 to 39<br>+66 (2) 643 13 40<br>kamthoninthuyot@schmidtthailand.com |
| **Trinidad &Tobago** | siehe/see Mexico | |
| **Tunisia** | Teletek<br>71, Rue Alain Savary<br>Residence Alain Savary (C64)<br>1003 Tunis | +216 (71) 77 22 88<br>+216 (71) 77 05 53 |
| **Turkey** | Rohde & Schwarz International GmbH<br>Liaison Office Istanbul<br>Bagdad Cad. 191/3, Arda Apt. B-Blok<br>81030 Selamicesme-Istanbul | +90 (216) 385 19 17<br>+90 (216) 385 19 18<br>rsturk@superonline.com |
| **Ukraine** | Rohde & Schwarz<br>Representative Office Kiev<br>4, Patris Loumoumba ul<br>01042 Kiev | +38 (044) 268 60 55<br>+38 (044) 268 83 64<br>rsbkiev@public.ua.net |
| **United Arab Emirates** | Rohde & Schwarz International GmbH<br>Liaison Office Abu Dhabi<br>P.O. Box 31156<br>Abu Dhabi | +971 50 62 40 197<br>+971 (4) 3944 794<br>michael.rogler@rsd.rohde-schwarz.com |
| **United Arab Emirates** | Rohde & Schwarz Bick Mobile Communication<br>P.O.Box 17466<br>Dubai | +971 (4) 883 71 35<br>+971 (4) 883 71 36 |
| **United Arab Emirates** | Rohde & Schwarz Emirates L.L.C.<br>Ahmed Al Nasri Building, Mezzanine Floor,<br>P.O.Box 31156<br>Off old Airport Road<br>Behind new GEMACO Furniture<br>Abu Dhabi | +971 (2) 631 20 40<br>+971 (2) 631 30 40<br>rsuaeam@emirates.net.ae |

# Adressen/Addresses

| | | |
|---|---|---|
| **United Kingdom** | Rohde & Schwarz UK Ltd.<br>Ancells Business Park<br>Fleet<br>Hampshire<br>GU 51 2UZ England | +44 (1252) 81 88 88 (sales)<br>+44 (1252) 81 88 18 (service)<br>+44 (1252) 81 14 47<br>sales@rsuk.rohde-schwarz.com |
| **Uruguay** | Aeromarine S.A.<br>Cerro Largo 1497<br>11200 Montevideo | +598 (2) 400 39 62<br>+598 (2) 401 85 97<br>mjn@aeromarine.com.uy |
| **USA** | Rohde & Schwarz, Inc.<br>Broadcast & Comm. Equipment<br>8661-A Robert Fulton Drive<br>Columbia, MD 21046-2265 | +1 (410) 910 78 00<br>+1 (410) 910 78 01<br>rsatv@rsa.rohde-schwarz.com<br>rsacomms@rsa.rohde-schwarz.com |
| **USA** | Rohde & Schwarz, Inc.<br>Marketing & Support Center/T&M Equipment<br>2540 SW Alan Blumlein Way<br>M/S 58-925<br>Beaverton, OR 97077-0001 | +1 (503) 627 26 84<br>+1 (503) 627 25 65<br>info@rsa.rohde-schwarz.com |
| **USA** | Rohde & Schwarz, Inc.<br>Systems & EMI Products<br>8080 Tristar Drive<br>Suite 120<br>Irving, Texas 75063 | +1 (469) 713 53 00<br>+1 (469) 713 53 01<br>info@rsa.rohde-schwarz.com |
| **Venezuela** | Equilab Telecom C.A.<br>Centro Seguros La Paz<br>Piso 6, Local E-61<br>Ava. Francisco de Miranda<br>Boleita, Caracas 1070 | +58 (2) 12 34 46 26<br>+58 (2) 122 39 52 05<br>r_ramirez@equilabtelecom.com |
| **Venezuela** | Representaciones Bopic S.A.<br>Calle C-4<br>Qta. San Jose<br>Urb. Caurimare<br>Caracas 1061 | +58 (2) 129 85 21 29<br>+58 (2) 129 85 39 94<br>incotr@cantv.net |
| **Vietnam** | Schmidt Vietnam Co. (H.K.) Ltd.,<br>Representative Office Hanoi<br>Intern. Technology Centre<br>8/F, HITC Building<br>239 Xuan Thuy Road<br>Cau Giay, Tu Liem<br>Hanoi | +84 (4) 834 61 86<br>+84 (4) 834 61 88<br>svnhn@schmidtgroup.com |
| **West Indies** | siehe/see Mexico | |

## Safety Instructions

This unit has been designed and tested in accordance with the EC Certificate of Conformity and has left the manufacturer's plant in a condition fully complying with safety standards.

To maintain this condition and to ensure safe operation, the user must observe all instructions and warnings given in this operating manual.

**Safety-related symbols used on equipment and documentation from R&S:**

Observe operating instructions

Weight indication for units >18 kg

PE terminal

Ground terminal

Danger! Shock hazard

Warning! Hot surfaces

Ground

Attention! Electrostatic sensitive devices require special care

1. The unit may be used only in the operating conditions and positions specified by the manufacturer. Unless otherwise agreed, the following applies to R&S products:

   IP degree of protection 2X, pollution severity 2 overvoltage category 2, only for indoor use, altitude max. 2000 m.

   The unit may be operated only from supply networks fused with max. 16 A.

   Unless specified otherwise in the data sheet, a tolerance of ±10% shall apply to the nominal voltage and of ±5% to the nominal frequency.

2. For measurements in circuits with voltages $V_{rms}$ > 30 V, suitable measures should be taken to avoid any hazards.

   (using, for example, appropriate measuring equipment, fusing, current limiting, electrical separation, insulation).

3. If the unit is to be permanently wired, the PE terminal of the unit must first be connected to the PE conductor on site before any other connections are made. Installation and cabling of the unit to be performed only by qualified technical personnel.

4. For permanently installed units without built-in fuses, circuit breakers or similar protective devices, the supply circuit must be fused such as to provide suitable protection for the users and equipment.

5. Prior to switching on the unit, it must be ensured that the nominal voltage set on the unit matches the nominal voltage of the AC supply network.

   If a different voltage is to be set, the power fuse of the unit may have to be changed accordingly.

6. Units of protection class I with disconnectible AC supply cable and appliance connector may be operated only from a power socket with earthing contact and with the PE conductor connected.

7. It is not permissible to interrupt the PE conductor intentionally, neither in the incoming cable nor on the unit itself as this may cause the unit to become electrically hazardous.

   Any extension lines or multiple socket outlets used must be checked for compliance with relevant safety standards at regular intervals.

8. If the unit has no power switch for disconnection from the AC supply, the plug of the connecting cable is regarded as the disconnecting device. In such cases it must be ensured that the power plug is easily reachable and accessible at all times (length of connecting cable approx. 2 m). Functional or electronic switches are not suitable for providing disconnection from the AC supply.

   If units without power switches are integrated in racks or systems, a disconnecting device must be provided at system level.

9. Applicable local or national safety regulations and rules for the prevention of accidents must be observed in all work performed.

   Prior to performing any work on the unit or opening the unit, the latter must be disconnected from the supply network.

   Any adjustments, replacements of parts, maintenance or repair may be carried out only by authorized R&S technical personnel.

   Only original parts may be used for replacing parts relevant to safety (eg power switches, power transformers, fuses). A safety test must be performed after each replacement of parts relevant to safety.

   (visual inspection, PE conductor test, insulation-resistance, leakage-current measurement, functional test).

continued overleaf

10. Ensure that the connections with information technology equipment comply with IEC950 / EN60950.
11. Lithium batteries must not be exposed to high temperatures or fire.

    Keep batteries away from children.

    If the battery is replaced improperly, there is danger of explosion. Only replace the battery by R&S type (see spare part list).

    Lithium batteries are suitable for environmentally-friendly disposal or specialized recycling. Dispose them into appropriate containers, only.

    Do not short-circuit the battery.
12. Equipment returned or sent in for repair must be packed in the original packing or in packing with electrostatic and mechanical protection.
13. Electrostatics via the connectors may damage the equipment. For the safe handling and operation of the equipment, appropriate measures against electrostatics should be implemented.
14. The outside of the instrument is suitably cleaned using a soft, lint-free dustcloth. Never use solvents such as thinners, acetone and similar things, as they may damage the front panel labeling or plastic parts.
15. Any additional safety instructions given in this manual are also to be observed.

# Contents


**1 Performance Test ..... 1.1**

**General ..... 1.1**

A) Calibration by an R&S Representative with an ACS Calibration System ..... 1.1

B) Sending the Instrument to the Factory (Memmingen, Germany) ..... 1.1

Necessary Documents ..... 1.1

**Measuring Instruments and Auxiliary Equipment ..... 1.2**

Test Setups ..... 1.3

Reference Frequencies ..... 1.3

TX Level Measurements ..... 1.3

General TX measurements ..... 1.4

RX Level measurements ..... 1.4

General RX Measurements ..... 1.5

RX Demodulation Measurements ..... 1.5

**Tolerance Analysis ..... 1.6**

**Manual Test Procedure ..... 1.7**

Selftest ..... 1.7

Interface Test ..... 1.8

IEC-bus Interface ..... 1.8

RS–232 Interface ..... 1.8

Reference Frequencies ..... 1.8

REF IN ..... 1.8

REF OUT 1 ..... 1.9

REF OUT 2 ..... 1.9

TX Frequency Accuracy ..... 1.10

TX Frequency Settling Time ..... 1.10

TX Level Error ..... 1.10

VSWR ..... 1.10

TX Level Settling Time ..... 1.11

TX Harmonics ..... 1.11

TX Non Harmonics ..... 1.11

TX In-Band Spurious Signals ..... 1.11

TX Fixed Spurious Signals ..... 1.12

TX SSB Phase Noise ..... 1.12

TX Residual FM ..... 1.12

TX Residual AM ..... 1.12

TX Carrier/Sideband Suppression, Max. Distortion ..... 1.13

RX Power Meter (Frequency-Selective) ..... 1.13

RX Power Meter (Wideband) ..... 1.13
RX Harmonics ..... 1.13
RX Spurious Response / Image Rejection ..... 1.14
RX SSB Phase Noise ..... 1.14
RX Residual FM/AM ..... 1.15
RX Dynamic/ Average Noise Level ..... 1.15
Options for CMU200 ..... 1.16
TX GSM Modulation ..... 1.16
RX GSM Dem odulation ..... 1.16
Function Test with Mobile Stations (CMU200) ..... 1.17
GSM mobile test ..... 1.17
CDMA mobile test ..... 1.17
IS136-mobile test ..... 1.17
AMPS-mobile test ..... 1.17

**Test Report ..... 1.18**

**2 Adjustment ..... 2.1**

**Manual Adjustment ..... 2.1**
Measuring Instruments and Auxiliary Equipment ..... 2.1
Preparing the Instrument ..... 2.2
Adjusting the + 5 VDC Reference Voltage ..... 2.2
Adjusting the 10 MHz Reference Frequency ..... 2.3
TCXO 2.3
OCXO REFERENCE OSC. CMU-B11 ..... 2.3
OCXO REFERENCE OSC. CMU-B12 ..... 2.3

**Automatic Adjustment of Module Data ..... 2.4**
Preparing the adjustment ..... 2.4
Performing the adjustment ..... 2.4

**3 Repair ..... 3.1**

**Instrument Design and Function Description ..... 3.1**
Block diagram ..... 3.2
Instrument Frame ..... 3.3
Rear of Instrument Frame ..... 3.3
Front of Instrument Frame ..... 3.3
Cooling the Instrument ..... 3.4
FRONT MODULE ..... 3.5
POWER SUPPLY ..... 3.6
MOTHERBOARD ..... 3.7
REFERENCE BOARD ..... 3.8

Option OCXO REFERENCE OSC. CMU-B11 or B12 ..... 3.9
RF FRONTEND ..... 3.9
RXTX BOARD1 ..... 3.10
DIGITAL BOARD ..... 3.12
Option UNIVERSAL SIGNALLING UNIT CMU-B21 ..... 3.13
Option AUDIO-GEN. + ANA. CMU-B41 ..... 3.15
Option CDMA (IS95) Signalling Unit CMU-B81 ..... 3.16

**MODULE Replacement ..... 3.17**

Replacing the FRONT MODULE ..... 3.17
Opening the instrument and removing the FRONT MODULE ..... 3.17
Installing the new FRONT MODULE and completing the instrument ..... 3.18
Putting into operation ..... 3.18
Replacing the FRONT MODULE CONTROLLER in the FRONT MODULE ..... 3.19
Opening the instrument and removing the FRONT MODULE ..... 3.19
Removing the CONTROLLER from the FRONT MODULE ..... 3.20
Installing the new FRONT MODULE CONTROLLER ..... 3.20
Installing the option again and completing the instruments ..... 3.20
Putting into operation ..... 3.21
Replacing the Lithium Battery in the FRONT MODULE ..... 3.22
Opening the instrument and removing the FRONT MODULE ..... 3.22
Removing the lithium battery ..... 3.23
Installing the new battery and completing the instrument ..... 3.24
Putting into operation ..... 3.24
Replacing the Hard Disk in the FRONT MODULE ..... 3.25
Opening the instrument and removing the FRONT MODULE ..... 3.25
Removing the hard disk from the FRONT MODULE ..... 3.26
Installing the new hard disk ..... 3.26
Putting into operation ..... 3.27
Replacing the Memory Modules in the FRONT MODULE ..... 3.28
Opening the instrument and removing the FRONT MODULE ..... 3.28
Making the memory modules accessible ..... 3.29
Removing the memory module ..... 3.29
Installing the new memory module and completing the instrument ..... 3.29
Putting into operation ..... 3.29
Replacing the LCD and/or DC/AC Converter in the FRONT MODULE ..... 3.30
Opening the instrument and removing the FRONT MODULE ..... 3.30
Making the LCD accessible ..... 3.31
Removing the LCD and/or DC/AC Converter ..... 3.31
Installing the new LCD and/or DC/AC converter, completing the instrument ..... 3.31
Putting into operation ..... 3.31
Replacing the Keyboard Membrane and/or Mat on the FRONT MODULE ..... 3.32
Opening the instrument and removing the FRONT MODULE ..... 3.32
Removing the membrane ..... 3.33
Installing the new membrane and completing the instrument ..... 3.33
Putting into operation ..... 3.33
Replacing the Labeling Panel on the FRONT MODULE ..... 3.34
Removing the old labeling panel ..... 3.34
Installing the new labeling panel and completing the instrument ..... 3.34
Putting into operation ..... 3.34
Replacing the Options FLOPPY DISK DRIVE CMU-B61 or PCMCIA INTERFACE ..... 3.35

Opening the instrument and removing the FRONT MODULE ..... 3.35
Replacing the option ..... 3.36
Completing the instrument and putting into operation ..... 3.36
Replacing the RF FRONTEND ..... 3.37
Opening the instrument and removing the RF FRONTEND ..... 3.37
Installing the new RF FRONTEND MODULE, completing the instrument ..... 3.37
Automatic module data adjustment ..... 3.37
Replacing the REFERENCE BOARD ..... 3.38
Opening the instrument and removing the REFERENCE BOARD ..... 3.38
Installing the new REFERENCE BOARD and completing the instrument ..... 3.38
Automatic module data adjustment ..... 3.38
Replacing the RXTX BOARD1 ..... 3.39
Opening the instrument and removing the RXTX BOARD1 ..... 3.39
Installing the new RXTX BOARD1 and completing the instrument ..... 3.39
Automatic module data adjustment ..... 3.39
Replacing the TR-CORRECTION MODULE in the RXTX BOARD1 ..... 3.40
Opening the instrument and removing the TR-CORRECTION MODULE ..... 3.40
Installing the new TR-CORRECTION BOARD and completing the instr. ..... 3.40
Automatic module data adjustment ..... 3.40
Replacing the DIGITAL BOARD ..... 3.41
Opening the instrument and removing the DIGITAL BOARD ..... 3.41
Installing the new DIGITAL BOARD and completing the instrument ..... 3.41
Automatic module data adjustment ..... 3.41
Replacing the MODULES: ADC MODULE1, DDC MODULE1, TXDSP MODULE1, AUC MODULE1 in the DIGITAL BOARD ..... 3.42
Opening the instrument and removing the modules ..... 3.42
Installing the new sandwich module and completing the instrument ..... 3.42
Automatic module data adjustment ..... 3.43
Replacing the Option OCXO REFERENCE OSC. CMU-B11 or CMU-B12 ..... 3.44
Opening the instrument and removing the OPTION OCXO REF. OSC ..... 3.44
Installing the new OPTION OCXO REFERENCE OSC. and completing the instrument ..... 3.44
Manual OCXO adjustment ..... 3.44
Replacing the Option UNIVERSAL SIGNALLING UNIT CMU-B21 ..... 3.45
Opening the instrument and removing the OPTION UNIV. SIGN. UNIT ..... 3.45
Installing the new OPTION UNIV. SIGN. UNIT and completing the instr. ..... 3.45
Automatic module data adjustment ..... 3.45
Replacing the MODULES: DSP MODULE0/1, IQOUT MODULE, OPTION SPEECH CODEC CMU-B52 (INCLUDES DSP MODULE3) in the UNIV. SIGN. UNIT ..... 3.46
Opening the instrument and removing the modules ..... 3.46
Installing the new sandwich module and completing the instrument ..... 3.46
Automatic module data adjustment ..... 3.47
Replacing the Option AUDIO-GEN. + ANA. CMU-B41 ..... 3.48
Opening the instrument and removing the Option AUDIO-GEN. + ANA. ..... 3.48
Installing the new Option AUDIO-GEN. + ANA. and completing the instr. ..... 3.48
Automatic module data adjustment ..... 3.48
Replacing the POWER SUPPLY ..... 3.49
Removing the POWER SUPPLY ..... 3.49
Installing the new POWER SUPPLY ..... 3.49
Replacing the Instrument Fan ..... 3.50
Opening the instrument and removing the fan ..... 3.50
Installing the new fan and completing the instrument ..... 3.50

Replacing the MOTHERBOARD ..... 3.51
MOTHERBOARD1 (big MOTHERBOARD) ..... 3.51
Opening the instrument and removing MOTHERBOARD1 ..... 3.51
Installing the new MOTHERBOARD1 and completing the instrument ..... 3.51
MOTHERBOARD2 (small MOTHERBOARD) ..... 3.52
Opening the instrument and removing MOTHERBOARD2 ..... 3.52
Installing the new MOTHERBOARD2 and completing the instrument ..... 3.52
FRONTPANEL BOARD (at the front of the instrument frame) ..... 3.52
Opening the instrument and removing the FRONTPANEL BOARD ..... 3.52
Installing the new FRONTPANEL BOARD and completing the instrument ... 3.52
REARPANEL BOARD1 (Interface board for Standard Connectors at the Rear of the Instrument Frame) ..... 3.53
Opening the instrument and removing the REARPANEL BOARD1 ..... 3.53
Installing the new REARPANEL BOARD1 and completing the instrument .... 3.53
REARPANEL BOARD2 (Interface Board for Further Connectors at the Rear of the Instrument Frame) ..... 3.53
Opening the Instrument and removing the REARPANEL BOARD2 ..... 3.53
Installing the new REARPANEL BOARD2 and completing the instrument .... 3.53

**Troubleshooting ..... 3.54**

Troubleshooting using the LEDs (H1 to H8) on the MOTHERBOARD ..... 3.55
Troubleshooting using the SELFTEST Menu for Modules ..... 3.57
Troubleshooting using the INFO Menu for Modules ..... 3.58
Troubleshooting using the ERROR messages on the LC display ..... 3.60
More troubleshooting ..... 3.61
General errors on the transmitter side of the CMU ..... 3.61
General errors on the receiver side of the CMU ..... 3.62

**4 Software Update/Installing Options ..... 4.1**

**New Installation of the CMU Software ..... 4.1**
Software Update via PCMCIA INTERFACE ..... 4.1
Software Update via FLOPPY DISK DRIVE ..... 4.1
Performing a Software Update ..... 4.2

**Reinstalling the Old Software ..... 4.3**

**Loading Software as long as there is no VersionManager in the CMU ..... 4.3**

**Installing the Options ..... 4.4**

**5 Documents ..... 5.1**

**Module and Cable Exchange ..... 5.1**

# Tables

Table 1-1 Measuring instruments and auxiliary equipment for manual performance test ..... 1.2
Table 1-2 Test report ..... 1.18

Table 2-1 Measuring instruments and auxiliary equipment for manual adjustment of the CMU ..... 2.1

Table 5-1 List of power cables available ..... 5.2

# Contents of Manuals for Universal Radio Communication Tester CMU200/CMU300

## Service Manual Instrument

This service manual for Universal Radio Communication Tester CMU provides information on checking the generator for compliance with rated specifications, as well as on adjustment, repair and troubleshooting. It further contains all the information necessary for repairing the generator by the replacement of modules.

The service manual comprises five chapters and an annex (chapter 5) containing the CMU circuit documentation:

**Chapter 1** Provides all the information necessary to check CMU for compliance with rated specifications. The required test equipment is included, too.

**Chapter 2** Describes the adjustment of the +5 VDC reference source and of the 10-MHz reference frequency source as well as the software-controlled adjustment of individual module data following module replacement.

**Chapter 3** Describes the design of CMU as well as simple measures for repair and fault diagnosis, in particular, the replacement of modules and access to hardware settings by means of service commands.

**Chapter 4** Contains information on the extension and modification of CMU by installing instrument software and retrofitting options.

**Chapter 5** Contains spare parts lists and exploded views of CMU.

## Operating Manual

In the operating manual for CMU basic unit you will find information about the technical specifications of CMU, the controls and connectors on the front and rear panel, necessary steps for putting the instrument into operation, the basic operating concept, manual and remote control.

For introduction typical measurement tasks are explained in detail using the functions of the user interface and program examples.

The operating manual contains all information on the characteristics, operation and remote control of the CMU including *RF* and *Audio* measurements. It further provides hints on preventive maintenance and fault diagnosis by means of warnings and error messages output by the unit.

## Service Manual Modules

The service manual modules is not delivered with the instrument but may be obtained from your R&S service department using the order number 1100.4903.92.

Service manual modules contains information about the individual modules of CMU. This comprises the test and adjustment of the modules, fault detection within the modules and the interface description.

## Operating Manuals for Digital and Analog Network Tests

The operating manuals listed in the following table describe the test of mobile phones supporting different standards by means of the CMU200/CMU300 and the appropriate software and hardware options. Except for hardware-specific chapters that are not relevant to the software options, the network test operating manuals are organized like the CMU operating manual.

| Manual | Order Number | For Options | | |
|---|---|---|---|---|
| | | Type | Description | Stock No. |
| Operating Manual CMU-K21/-K22/-K23 | 1115.6088.12 | CMU-K21<br>CMU-K22<br>CMU-K23 | GSM900-MS for CMU-B21<br>GSM1800-MS for CMU-B21<br>GSM1900-MS for CMU-B21 | 1115.6007.02<br>1115.6107.02<br>1115.6207.02 |
| Operating Manual CMU-K27/-K28 | 1115.6688.12 | CMU-K27<br>CMU-K28 | TDMA800-MS for CMU-B21<br>TDMA1900-MS for CMU-B21 | 1115.6607.02<br>1115.6707.02 |
| Operating Manual CMU-K29 | 1115.6888.12 | CMU-K29 | AMPS-MS for CMU-B21 | 1115.6807.02 |
| Operating Manual CMU-K30/-K31/-K32/-K33 | 1115.4185.12 | CMU-K30<br>CMU-K31<br>CMU-K32<br>CMU-K33<br><br>CMU-K39<br>CMU-K41 | GSM400-BS for CMU-B21<br>GSM900-BS for CMU-B21<br>GSM1800-BS for CMU-B21<br>GSM1900-BS for CMU-B21<br><br>MOC/MTC<br>EDGE for CMU-K30/31/32/33 | 1115.4004.02<br>1115.4104.02<br>1115.4104.02<br>1115.4104.02<br><br>1115.4791.02<br>1115.4604.02 |
| Operating Manual CMU-K81/-K82 | 1115.5581.12 | CMU-K81<br>CMU-K82 | CDMA800-MS (IS95) for CMU-B81<br>CDMA1900-MS (IS95) for CMU-B81 | 1115.5500.02<br>1115.5600.02 |
| Operating Manual CMU-K53 | 1115.5081.12 | CMU-K53 | Bluetooth for CMU | 1115.5000.02 |

The GSM base station tests described in operating manual CMU-K30/-K31/-K32 require a CMU300 (Universal Radio Communication Tester for BTS). All other radio communication equipment is tested with model CMU200.

# 1 Performance Test

This chapter provides the necessary information for checking the technical data of the CMU. Please read the general notes on the test procedure on page 1.7 first. Then follows a list of the measuring equipment required for the performance test; a form for the test report is to be found at the end of this chapter.

The adjustment of the instrument for restoring the data integrity and the measuring equipment required for this purpose will be described in chapter 2 of this service manual.

## General

The technical data of a CMU can be checked in the following ways:

### A) Calibration by an R&S Representative with an ACS Calibration System

**Advantages**

- Automatic procedure
- Small measurement uncertainties
- Calibration and readjustment
- In most cases, the instrument does not have to leave the country

### B) Sending the Instrument to the Factory (Memmingen, Germany)

**Advantages**

- Automatic procedure at the final test setup
- Minimum measurement uncertainties
- Calibration and readjustment

## Necessary Documents

- Operating manual CMU200/CMU300
- Data sheet CMU200

***Note:*** *It is recommended to read the following journal on the subjects "measurement uncertainty" and "tolerance analysis": ETSI Technical Report ETR 028, June 1997*

# Measuring Instruments and Auxiliary Equipment

**Table 1-1 Measuring instruments and auxiliary equipment for manual performance test**

| Item | Type of instrument | Required characteristics | Appropriate device | R & S order number | Use |
|---|---|---|---|---|---|
| 1 | Signal generator | 100 kHz to 2.7 GHz,<br>Generation of a GSM signal (dummy burst) | SME03<br>SMIQ | 1038.6002.03 | RX measurements |
| 2 | Spectrum analyzer | 100 kHz to 7 GHz,<br>Demodulation of GSM signals | FSE with FSE-B7<br>FSIQ<br>FSP–3 | 1066.30.10.20<br>1066.30.10.30<br>1066.4317.02<br>1093.4495.03 | TX measurements |
| 3 | Power meter | | NRVD with sensors<br>NRV-Z4<br>NRV-Z51 | | RX measurements,<br>TX measurements |
| 4 | Power amplifier | 100 kHz to 2.7 GHz,<br>Pout = 100 W | | | RX measurements |
| 5 | Harmonics filter | attenuate the harmonics of the power amplifiers to min 30 dBc | | | RX measurements |
| 6 | Directional coupler | 50 MHz to 2.7 GHz,<br>up to 100 W | | | RX measurements |
| 7 | Network analyzer<br>or VSWR Bridge | 100 kHz to 2.7 GHz | ZVR<br>ZRC | 1043.0009.61 | Reflection coefficient/<br>VSWR<br>RF connectors |

# Test Setups

The quality of the test setup has an effect on the measurement procedures.

***Note:*** *Make sure to use only high-quality coax cables and coax connectors as well as calibrated measuring equipment.*

## Reference Frequencies

Test setup REF1:

REF1

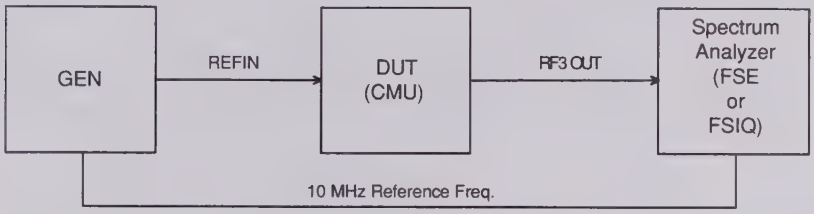


Test setup REF2:

REF2

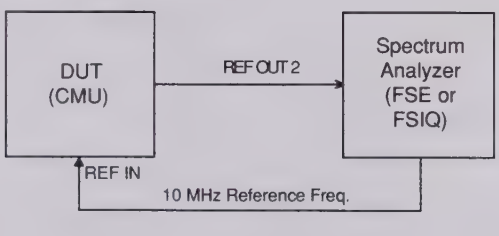


## TX Level Measurements

Test setup TX1, TX2, TX3, TX4 (depending on level range):

- Normalize spectrum analyzer (FSIQ) to wideband power meter (NRVD) at *Max. Level* setting of the CMU (test setups TX1, TX2, TX3).

The attenuator of the spectrum analyzer must be held at this position over 60 dB.

- Normalize spectrum analyzer with preamplifier to spectrum analyzer at last level (test setups TX3, TX4).

The attenuator of the spectrum analyzer must be held at this position over 60 dB.

TX1

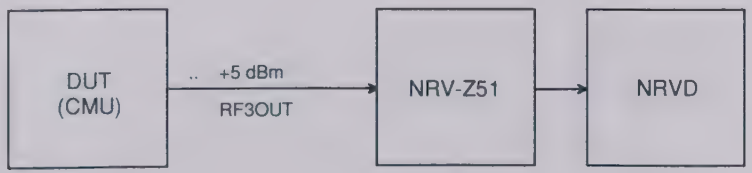

TX2

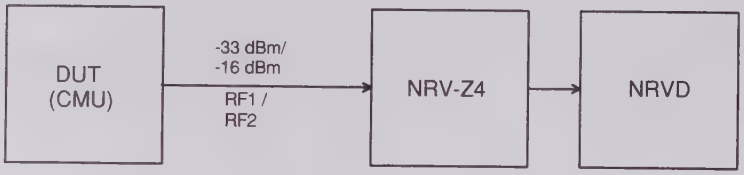


TX3

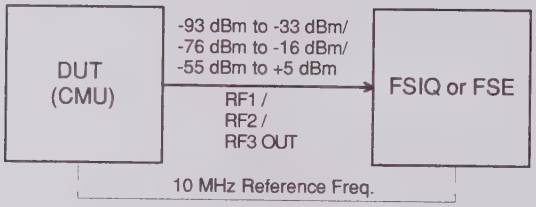


TX4

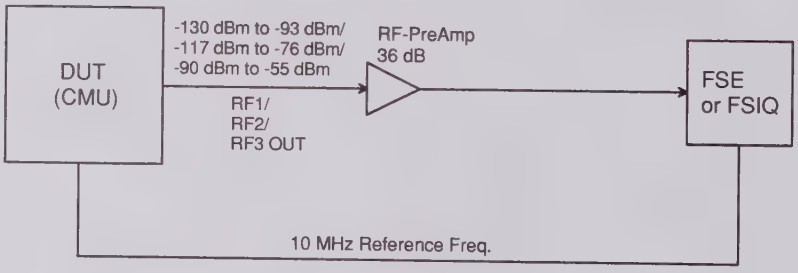


## General TX measurements

Test setup TX5:

TX5

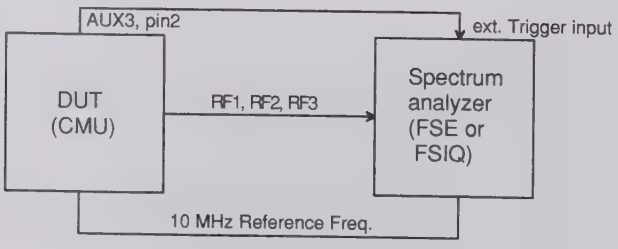


## RX Level measurements

Test setup RX1, RX2 (depending on level range):

RX1

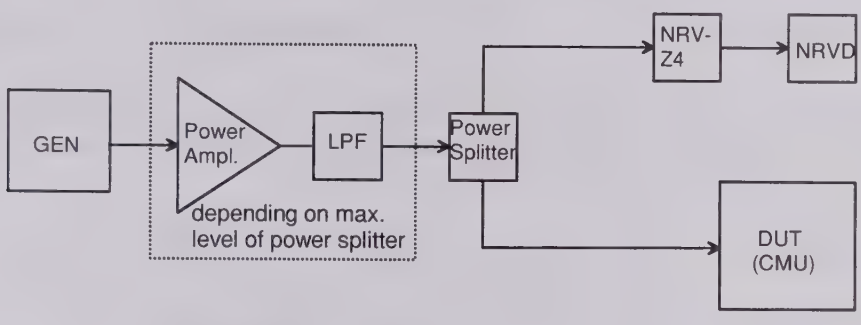


RX2

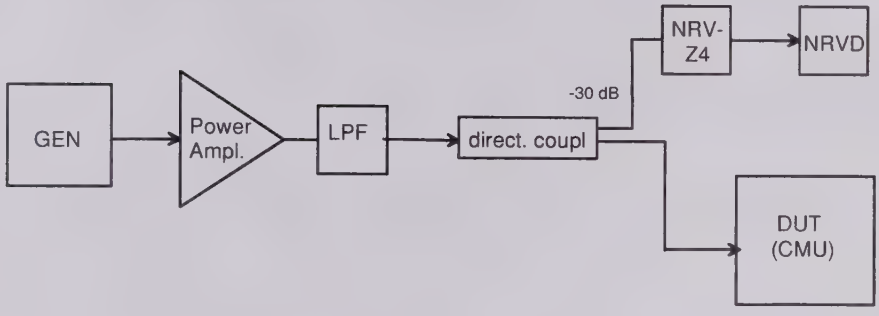


## General RX Measurements

Test setup RX3:

RX3

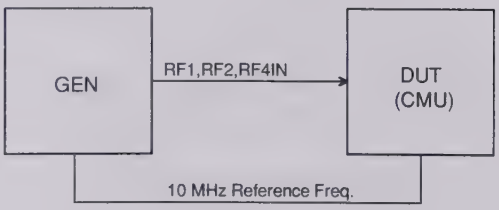


## RX Demodulation Measurements

Test setup RX4:

RX4

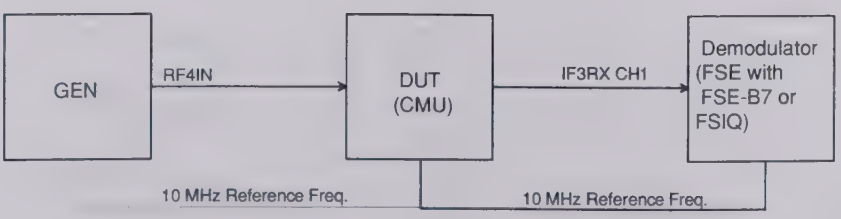

# Tolerance Analysis

Due to the small measurement uncertainty of the CMU, the measuring equipment must meet stringent requirements. Since the measurement uncertainty of the measuring equipment to be achieved depends on the test setup used, it is recommended to perform a tolerance analysis.

To be able to trace back errors in the measurement, the measurement uncertainty should also be indicated in the test report.

The tolerances given in the test report refer to the values specified in the data sheet, ie the measurement uncertainties of the test setup used are to be taken into account as well.

Unless otherwise specified, the specified tolerances are always to be observed.

***Note:*** *Please take into account the ETSI Technical Report ETR 028.*
*The given tolerances refer to CMU data sheet 04/99.*

# Manual Test Procedure

Some additional measurements can only be performed using a mobile phone via the normal operating menus of the CMU. These measurements are described in the section *'Function Test with Mobile Stations'*.

The suggested frequencies and levels at which the measurements should be performed have been selected according to the instrument concept. The user can of course also select other frequencies and levels within the scope of values guaranteed in the data sheet.

***Note:*** *Before testing the rated specifications, allow the instrument to warm up for at least 15 min. The ambient temperature should be 23 °C to 26 °C.*

## Selftest

The CMU offers various selftest options for checking the functioning and for troubleshooting. Before carrying out the performance test, the *Maintanance* menu in the *BASE* function group should be called up and the following selftests should be performed:

- *Continuous Selftest*
- *1→4/3→2 RF Loop Test*

Preparation: ➢ Start user SW of the CMU (switch on instrument).

Test: ➢ Select the individual test in the BASE (MAINTENANCE) menu and check the results *(Continuous Selftest, 1→4/3→2 RF Loop Test)*.

***Note:*** *The* Continuous Selftest combines the System Selftest *and* Internal RF Loop Selftest. *In this test, only a passed/failed message with error output is indicated. In case of errors, an error file 'cst.err' is created in addition.*

*1→4/3→2 RF Loop Test: Selftest RF Path RF1→RF4 IN and RF3 OUT→RF2 via external N-coax cable by power measurements via internal generator and analyzer. In this test, all measured values are indicated.*

*To obtain more detailed information start the following tests:*

| | |
|---|---|
| ***System selftest:*** | *Selftest of the instrument for diagnostic voltages; only a passed/failed message with error output is indicated.* |
| ***Internal RF Loop Selftest:*** | *Selftest of the RF path by means of power measurements via internal generator and analyzer. All measured values are indicated.* |
| ***FE Selftest:*** | *Selftest of the RF FRONTEND module via diagnostic voltages. All measured values are indicated.* |
| ***REF Selftest:*** | *Selftest of the REFERENCE BOARD module via diagnostic voltages. All measured values are indicated.* |
| ***DIG Selftest:*** | *Selftest of the DIGITAL BOARD module via diagnostic voltages. All measured values are indicated* |
| ***RXTX1 Selftest:*** | *Selftest of the RXTX1 BOARD module via diagnostic voltages. All measured values are indicated.* |

# Interface Test

## IEC-bus Interface

Preparation:
- ➢ Connect the IEC-bus interfaces of the CMU and the controller via IEC-bus cables.

Test:
- ➢ Send the string '*IDN?<CR><NL>' from the controller to the CMU and read the reply *STRING* of the CMU.

  The reply *STRING* must contain the following message:

  *'ROHDE & SCHWARZ,CMU<Var>,<Ser_Nr>,<Firmware_Vers._Nr>'*

## RS–232 Interface

Preparation:
- ➢ Connect the RS–232 interfaces of the CMU and the controller via null-modem cables (cf. page 5.1.1, "Measuring Instruments and Auxiliary Equipment").

Set the RS–232 interface of the controller to 8 data bits, 1 start bit, 1 stop bit, no parity bit, XON/XOFF handshake and 19200 baud.

Test:
- ➢ Send the string '*IDN?<CR><NL>' from the controller to the CMU and read the reply string of the CMU.

The reply string must contain the following message:

'ROHDE & SCHWARZ,CMU<Var>,<Ser_Nr>,<Firmware_Vers._No>'

# Reference Frequencies

For different range of adjustment of the internal reference oscillator, the synchronization with an external reference frequency is checked.

***Note:*** *The resolution of the frequency counter/analyzer should be max. 1/10 of the maximum permissible deviation.*

## REF IN

The frequency and level ranges and the pull-in range are checked. The signal generator and the frequency counter must be synchronized (test setup REF1).

Preparation:
- ➢ Feed in at REF IN: 52 MHz sinewave, 0.5 V(rms)
- ➢ Connect frequency counter to RF3 OUT.

Control: Set CMU to external reference 52 MHz, RF 1 GHz (menu *RF ANALYZER/ GENERATOR*.)

Test: Use frequency counter to measure frequency deviation from 1 GHz.

Preparation:
- Feed in at REF IN: 1 MHz sinewave, 0.5 V(rms).
- Connect frequency counter to RF3 OUT.

Control:
- Set CMU to external reference 1 MHz, RF 1 GHz.

Test:
- Use frequency counter to measure frequency deviation from 1 GHz.

Preparation:
- Feed in at REF IN: 10.000 050 MHz sinewave, 1.4 V(rms).
- Connect frequency counter to RF3 OUT.

Control:
- Set CMU to external reference 10 MHz, RF 1 GHz.

Test:
- Use frequency counter to measure frequency deviation from 1.000 005 000 GHz.

Preparation:
- Feed in at REF IN: 9.999 950 MHz sinewave, 1.4 V(rms).
- Connect frequency counter to RF3 OUT.

Control:
- Set CMU to external reference 10 MHz, RF 1 GHz.

Test:
- Use frequency counter to measure frequency deviation from 0.999 995 GHz.

## REF OUT 1

The level and frequency are checked.

**Int. 10 MHz:**
- Set CMU to internal reference.
- Measure at REF OUT 1: 10 MHz, level > 1.4 V(pp).

**REF IN signal:**
- Set CMU to external reference.
- Feed in at REF IN: 52 MHz TTL, (as an alternative +16 dBm from signal)
- Measure at REF OUT 1: 52 MHz, level > 1.4 V(pp).
- Measure at REF OUT 1: frequency 52 MHz ± 1 Hz
- Feed in at REF IN: 1 MHz TTL, (as an alternative +16 dBm from signal generator).
- Measure at REF OUT 1: 1 MHz, level > 0.5 V(rms) (1.4 V(pp)).
- Measure at REF OUT 1: frequency 1 MHz ± 1 Hz.

## REF OUT 2

The level and frequency are checked. The CMU and the frequency counter must be synchronized (test setup REF2).

**REF OUT 2 signal 13 MHz:**
- Set CMU to external reference.
- Feed in at REF IN: 10 MHz sinewave, 0.5 V(rms).
- Set CMU to REF OUT 2 13 MHz or 10 MHz (depending on SW; menu Connection Control/Synch.).
- Measure at REF OUT 2: 13 MHz or 10 MHz, level > 1.0 V(pp).
- Measure at REF OUT 2: frequency 13 MHz or 10 MHz ± 1 Hz.

## TX Frequency Accuracy

Preparation: Test setup TX5, but CMU not synchronized with frequency counter/analyzer and no external trigger.

CMU connector RF3 OUT.

Control: ➢ Set CMU to desired frequency, level 0 dBm.

Test: ➢ Determine frequency deviation from nominal frequency.

## TX Frequency Settling Time

Preparation: Test setup TX5, in addition trigger cable from CMU (D-sub connector AUX3, pin2) to analyzer.

CMU connector RF3 OUT.

CMU: Ramping off, hopping on, F1 = start freq., F2 = stop freq.

Analyzer: Sweep time 1 ms, Center = stop frequency, FM demodulation, real time off, BW 50 kHz, 1 kHz/Div, external trigger, Slope negative

Control: ➢ Set CMU to desired frequencies and hopping, level 0 dBm.

Test: Time from trigger point when the specified offset (< 1 kHz) from the stop frequency is reached.

## TX Level Error

Preparation: Test setup TX1 to TX4 (depending on level range).

Control: ➢ Set CMU to desired connector, frequency and level *(RF Analyzer* must be *OFF).*

Test: ➢ Measure the TX level of the CMU.

***Note:*** *The given frequencies and levels are suggested values. Of course, it is also possible to use other values for the measurement.*

## VSWR

Preparation: ➢ Connect (scalar) network analyzer to RF1, RF2, RF3 OUT, RF4 IN one after the other.

Cable losses must be corrected.

Control: CMU: Switch generator on and set level to minimum (–130 dBm or –90 dBm), switch RF wideband analyzer on (RF1/RF2/RF4 IN).

Test: ➢ Measure VSWR at 10 MHz, 900 MHz, 1800 MHz, 2700 MHz.

## TX Level Settling Time

Preparation: Test setup TX5, in addition trigger cable from CMU (D-sub connector AUX3, pin2) to analyzer.

CMU: Connector RF3 OUT 1GHz, Ramping On, Hopping Off.

Analyzer: Sweep time = 40 µs, Center = 1 GHz , Span = 0, RBW = 10 MHz, external trigger.

Control: ➢ Set CMU to frequency = 1 GHz, specified level and ramping mode.

Test: ➢ The time period from the trigger point to the point in time when the nominal level < 0.5 dB has been reached is measured.

## TX Harmonics

Preparation: Test setup TX5, no external trigger

Analyzer: Center = 2 x $f_{nom}$ or Center = 3 x $f_{nom}$, Span = 1 MHz.

Control: ➢ Set CMU to connector RF1, specified frequency, level = –27 dBm.

Test: The suppression of the signal at twice or three times the nominal frequency is measured relative to the nominal signal.

Control: ➢ Set CMU to connector RF2, specified frequency, level = –10 dBm.

Test: The suppression of the signal at twice or three times the nominal frequency is measured relative to the nominal signal.

Control: ➢ Set CMU to connector RF3 OUT, specified frequency, level = +10 dBm.

Test: The suppression of the signal at twice and three times the nominal frequency is measured relative to the nominal signal.

## TX Non Harmonics

## TX In-Band Spurious Signals

Spurious signals within the specified frequency bands are checked.

Preparation Test setup TX5, no external trigger

Analyzer Start/Stop = specified frequency range, RBW = 100 kHz

Control: ➢ Set CMU to connector RF3 OUT, specified setting frequency, level = 0 dBm.

Test: The suppression of the signal is measured at the test frequency relative to the set signal.

## TX Fixed Spurious Signals

Fixed spurious signals are checked.

Preparation: Test setup TX5, no external trigger.
Analyzer: Center = specified test frequency, RBW = 100 kHz, Span = 1 MHz.

Control: ➢ Set CMU to connector RF3 OUT, specified setting frequency, specified level.

Test: The suppression of the signal is measured at the test frequency relative to the set signal.

## TX SSB Phase Noise

Preparation: Test setup TX5, no external trigger
➢ Connect spectrum analyzer or modulation analyzer to RF3 OUT.

Control: ➢ Set CMU generator to specified RF frequency.
Output level at RF3 OUT 0 dBm,
Analyzer to specified center frequency,
Span = 50 kHz to 5 MHz, RBW = Span/500,
Noise measurement function.

Test ➢ Measure the phase noise at the specified spacing from the carrier.

## TX Residual FM

Preparation: Test setup TX5, no external trigger.
➢ Connect spectrum analyzer or modulation analyzer to RF1.

Control: ➢ Set CMU generator to the specified RF frequency.
Output level at RF1 –27 dBm, analyzer to specified center frequency, FM demodulator.

Test: ➢ The residual FM with the specified weighting is measured.

## TX Residual AM

Preparation: Test setup TX5, no external trigger.
➢ Connect spectrum analyzer or modulation analyzer to RF1.

Control: ➢ Set CMU generator to specified RF frequency.
Output level at RF1 –27 dBm, analyzer to specified center frequency, AM demodulator.

Test: ➢ The residual AM with the specified weighting is measured.

## TX Carrier/Sideband Suppression, Max. Distortion

The modulation quality of the analog IQ modulator of the CMU is measured.

Preparation: Test setup TX5, no external trigger.

- ➢ Connect spectrum analyzer to RF3 OUT.

Control:

- ➢ Set CMU generator to specified RF frequency.

  Output level at RF3 OUT, 0 dBm,
- ➢ Switch on RF generator with offset modulation, 300- kHz baseband filter,
- ➢ Set analyzer to center frequency $f_c$ = 1000 MHz, Span = 300 kHz / 3 MHz

Test: The suppression of the carrier at $f_c$ is measured relative to the useful sideband signal at $f_c + f_{mod}$.

## RX Power Meter (Frequency-Selective)

Preparation: Test setup RX1, RX2 (depending on level range).

Control:

- ➢ Set CMU to desired RX frequency and level and Input in menu *RF ANALYZER/ GENERATOR*.

  Measuring Bandwidth = 1 kHz.

Test:

- ➢ Measure RX level measurement accuracy of CMU.

***Note:*** *The given frequencies and levels are suggested values; of course, it is also possible to use other values for the measurement.*

## RX Power Meter (Wideband)

Preparation: Test setup RX1, RX2 (depending on level range).

Control:

- ➢ Set CMU to desired RX connector, frequency and level and Input in menu *RF Analyzer/ Generator*.

  Measuring *Bandwidth = Wide*

Test:

- ➢ Measure RX level measurement accuracy of CMU.

***Note:*** *The given frequencies and levels are suggested values; of course, it is also possible to use other values for the measurement.*

## RX Harmonics

Preparation: Test setup RX3,

Generator = $f_{in}$ ; level = 0 dBm.

Control:

- ➢ Set CMU to connector RF2, *Max Level* = 2 dBm.

Test: ➢ The suppression of the signal at twice and three times the input frequency is measured relative to the input signal.

Preparation: Test setup RX3

Generator = $f_{in}$ ; level = –2 dBm

Control: ➢ Set CMU to connector RF4 IN, *Max Level* = 0 dBm.

Test: ➢ The suppression of the signal at twice and three times of input frequency is measured relative to the input signal.

## RX Spurious Response / Image Rejection

Preparation: Test setup RX3,

Generator = $f_{in}$ ; level = 0 dBm.

Control: ➢ Set CMU to connector RF2, *Max Level* = 2 dBm, *Mode = Low Distortion*

Test: ➢ The suppression of the spurious or image signal is measured relative to the input signal.

Preparation: Test setup RX3,

Generator = $f_{in}$ ; level = –2 dBm.

Control: ➢ Set CMU to connector RF4 IN, *Max level = 0 dBm, Mode = Low Distortion*

Test: The suppression of the spurious or image signal is measured relative to the input signal.

## RX SSB Phase Noise

Preparation: Test setup RX3,

Generator = $f_{iCMU}$ + df ; level = 10 dBm.

Control: ➢ Set CMU to connector RF2, *Max Level* = 10 dBm and to desired frequency.
➢ Switch on frequency-selective power meter.

Test: The measurement is taken with a small test bandwidth at different carrier offsets.

***Note:*** *The input level is +10 dBm, RBW = 100 Hz*
*--> Phase noise = measured value –10 dB –21 dB.*

## RX Residual FM/AM

Preparation: Test setup RX4,

Generator = $f_{iCMU}$ ; level = –20 dBm.

Control:
- ➢ Set CMU to connector RF4 IN, *Max Level* = –20 dBm and to desired frequency.
- ➢ Switch on frequency-selective power meter.

Test: The measurement is taken with an external FM/AM demodulation instrument (FSE with FSE-B7) via the *IF3RXCH1* BNC connector at the rear panel of the CMU.
- ➢ Set the FSE to desired frequency, ref. level, AF filters.

## RX Dynamic/ Average Noise Level

Preparation: No signal is fed in, CMU generator is OFF.

Control: Set CMU to given receive frequency, *Max. Level, Bandwidth, Mode = Low Noise.*

Test: Use frequency-selective power meter, measurement bandwidth = 1 kHz / 500 kHz, measured value in dB below reference level *(Max. Level).*

## Options for CMU200

The following tests can be carried out only if the GSM-MS (CMU-K2x) software options are installed and enabled by entering a key code.

### TX GSM Modulation

Only with options CMU-K21, CMU-K22, CMU-K23 or CMU-K24:

The GSM phase/frequency error of a TX path is measured.

Preparation: Test setup TX5:

➢ Connect spectrum analyzer FSIQ to RF3 OUT.

Control: ➢ Set CMU generator to specified RF frequency.

| | |
|---|---|
| Output level at RF3 OUT | 10 dBm |
| *Training Sequence* | -> GSM0; |
| *Bit Mod.* | *-> PRBS* |
| *Transmission* | *-> BURST* |

Settings at spectrum analyzer FSIQ:
*Mode -> Digital Standards -> GSM*
*Mode -> Meas Result -> Result_Length -> 146* (the useful part normally comprises 147 bits, however, the FSIQ can be set to an integer number of bits only and therefore cuts off 0.5 bits at the beginning and at the end of the measurement range)
*Trigger -> Find Sync -> ON*
*Trigger -> Sync Pattern -> gsm_bts0* (training sequence GSM0)
*Trigger -> Sync Offset -> 60 symbols*

Test: Phase (rms and peak) and frequency errors are measured according to GSM recommendation.

### RX GSM Demodulation

Only with option CMU-K21, CMU-K22, CMU-K23 or CMU-K24:

The GSM phase/frequency error of a RX path is measured.

Preparation: ➢ Connect GSM signal generator to RF2 (test setup RX3).

The signal generator must be synchronized with the CMU via the 10 MHz reference frequency.

Control: Signal generator SMIQ: GSM signal at given frequency, level according to table, bursted with the following settings:

*Digital Std -> GSM/EDGE -> State -> ON;*
*Digital Std -> GSM/EDGE -> Select Slot -> Burst type -> NORM*
*Digital Std -> GSM/EDGE -> Select Slot -> Slot Level -> FULL*
*Digital Std -> GSM/EDGE -> Select Slot -> Data -> PN9*
*Digital Std -> GSM/EDGE -> Select Slot -> TSC -> TSC0*

CMU: GSM Non Signalling, *training sequence = GSM 0, trigger source = IF Power, Trigger Level = Medium*

Test: ➢ Measure GSM phase error (rms and peak) as well as frequency error.

# Function Test with Mobile Stations (CMU200)

## GSM mobile test

Only with Option CMU-K21, CMU-K22, CMU- K23 or CMU-K24.

| Location Update |
|---|
| Call to MS |
| Call Release |
| Call from MS |
| Echo test |
| Power ramp, Phase/Frequency error measurement |
| Handover GSM900/1800 |

## CDMA mobile test

Only with Option CMU-K81, CMU-K82.

| Location Update |
|---|
| Call to MS |
| Call Release |
| Call from MS |
| Echo test |

## IS136-mobile test

Only with Option CMU-K27, CMU-K28.

| Location Update |
|---|
| Call to MS |
| Call Release |
| Call from MS |
| Echo test |

## AMPS-mobile test

Only with Option CMU-K29.

| Location Update |
|---|
| Call to MS |
| Call Release |
| Call from MS |
| Echo test |

# Test Report

| ROHDE & SCHWARZ | Universal Radiocommunication Tester CMU | 1100.0008 |
|---|---|---|
| Serial number: | | |
| Test person: | | |
| Date: | | |
| Signature: | | |

**Table 1-2 Test report**

| Item No. | Description | Measure-ment to section | Min. | Actual | Max. | Measurement uncertainty | Unit |
|---|---|---|---|---|---|---|---|
| | Ambient temperature during calibration | | 23 | | 26 | | °C |
| **General Tests** | | | | | | | |
| | CONTINUOUS SELFTEST | | Passed | | passed | | |
| | 1→4/3→2 RF LOOP TEST | | Passed | | passed | | |
| | | | | | | | |
| | Adjusting +5 V DC REFERENCE VOLTAGE | Chapter 2 | 4.999 | | 5.001 | | mV |
| | Adjusting TCXO 10 MHz at RF3 OUT 1 GHz<br>(if none of the options CMU-B11 or CMU-B12 is installed) | Chapter 2 | –50 | | +50 | | Hz |
| | Adjusting CMU-B11 OCXO 10 MHz at RF3 OUT 1GHz<br>(if option CMU-B11is installed) | Chapter 2 | –10 | | +5 | | Hz |
| | Adjusting CMU-B12 OCXO 10 MHz at RF3 OUT 1GHz<br>(if option CMU-B12 is installed) | Chapter 2 | –10 | | +5 | | Hz |
| | REF IN 52 MHz | REF IN | –1 | | +1 | | Hz |
| | REF IN 1 MHz | | –1 | | +1 | | Hz |
| | REF IN 10 MHz +50 Hz | | –1 | | +1 | | Hz |
| | REF IN 10 MHz –50 Hz | | –1 | | +1 | | Hz |
| | REF OUT 1 Int 10 MHz | REF OUT 1 | 1.4 | | 5 | | V(pp) |
| | REF OUT 1 52 MHz | | 1.4 | | 5 | | V(pp) |
| | REF OUT 1 52 MHz | | –1 | | +1 | | Hz |
| | REF OUT 1 1 MHz | | 1.4 | | 5 | | V(pp) |
| | REF OUT 1 1 MHz | | –1 | | +1 | | Hz |

| Item No. | Description | Measure-ment to section | Min. | Actual | Max. | Measurement uncertainty | Unit |
|---|---|---|---|---|---|---|---|
| | REF OUT 2 13 MHz or 10 MHz | REF OUT 2 | 1 | | 5 | | V(pp) |
| | REF OUT 2 13 MHz or 10 MHz | | –1 | | +1 | | Hz |
| **TX Frequency Accuracy** | | | | | | | |
| | TX Frequency accuracy 2200 MHz | TX Frequency accuracy | –2200<br>–220<br>–11 | | +2200 (TCXO),<br>+220 (B11),<br>+11 (B12) | | Hz |
| **TX Frequency Settling** | | | | | | | |
| | TX frequency settling time F1 = 100 MHz ->F2 = 200 MHz to <1 kHz | TX Frequency settling | | | 400 | | µs |
| | TX frequency settling time F1 = 1800 MHz ->F2 = 1900 MHz to <1 kHz | | | | 400 | | µs |
| | TX frequency settling time F1 = 2200 MHz ->F2 = 2100 MHz to <1 kHz | | | | 400 | | µs |
| | TX frequency settling time F1 = 100 MHz ->F2 = 2200 MHz to <1 kHz | | | | 400 | | µs |
| | TX frequency settling time F1 = 2000 MHz ->F2 = 100 MHz to <1 kHz | | | | 400 | | µs |
| **VSWR** | | | | | | | |
| | VSWR RF1 10 MHz | VSWR | | | 1.2 | | |
| | VSWR RF1 900 MHz | | | | 1.2 | | |
| | VSWR RF1 1800 MHz | | | | 1.2 | | |
| | VSWR RF1 2700 MHz | | | | 1.6 | | |
| | VSWR RF2 10 MHz | | | | 1.2 | | |
| | VSWR RF2 900 MHz | | | | 1.2 | | |
| | VSWR RF2 1800 MHz | | | | 1.2 | | |
| | VSWR RF2 2700 MHz | | | | 1.6 | | |
| | VSWR RF3 OUT 10 MHz | | | | 1.5 | | |
| | VSWR RF3 OUT 900 MHz | | | | 1.5 | | |
| | VSWR RF3 OUT 1800 MHz | | | | 1.5 | | |
| | VSWR RF3 OUT 2700 MHz | | | | 1.7 | | |
| | VSWR RF4 IN 10 MHz | | | | 1.5 | | |
| | VSWR RF4 IN 900 MHz | | | | 1.5 | | |
| | VSWR RF4 IN 1800 MHz | | | | 1.5 | | |
| | VSWR RF4 IN 2700 MHz | | | | 1.6 | | |

| Item No. | Description | Measure-ment to section | Min. | Actual | Max. | Measurement uncertainty | Unit |
|---|---|---|---|---|---|---|---|
| **TX Level Settling Time** | | | | | | | |
| | TX Level settling time at P = +10 dBm to ΔP = 0.5 dB | TX level settling time | | | 4 | | µs |
| | TX Level settling time at P = –20 dBm to ΔP = 0.5 dB | | | | 4 | | µs |
| | TX Level settling time at P = –50 dBm to ΔP = 0.5 dB | | | | 4 | | µs |
| **TX Harmonics** | | | | | | | |
| | TX 2nd harmonic at RF2 at carrier frequency = 10 MHz | TX harmonics | | | –30 | | dBc |
| | TX 2nd harmonic at RF2 at carrier frequency = 900 MHz | | | | –30 | | dBc |
| | TX 2nd harmonic at RF2 at carrier frequency = 1800 MHz | | | | –30 | | dBc |
| | TX 2nd harmonic at RF2 at carrier frequency = 2200 MHz | | | | –30 | | dBc |
| | TX 3rd harmonic at RF2 at carrier frequency = 10 MHz | | | | –30 | | dBc |
| | TX 3rd harmonic at RF2 at carrier frequency = 900 MHz | | | | –30 | | dBc |
| | TX 3rd harmonic at RF2 at carrier frequency = 1800 MHz | | | | –30 | | dBc |
| | TX 3rd harmonic at RF2 at carrier frequency = 2200 MHz | | | | –30 | | dBc |
| | TX 2nd harmonic at RF3 OUT at carrier frequency = 10 MHz | | | | –20 | | dBc |
| | TX 2nd harmonic at RF3 OUT at carrier frequency = 900 MHz | | | | –20 | | dBc |
| | TX 2nd harmonic at RF3 OUT at carrier frequency = 1800 MHz | | | | –20 | | dBc |
| | TX 2nd harmonic at RF3 OUT at carrier frequency = 2200 MHz | | | | –20 | | dBc |
| | TX 3rd harmonic at RF3 OUT at carrier frequency = 10 MHz | | | | –20 | | dBc |
| | TX 3rd harmonic at RF3 OUT at carrier frequency = 900 MHz | | | | –20 | | dBc |
| | TX 3rd harmonic at RF3 OUT at carrier frequency = 1800 MHz | | | | –20 | | dBc |
| | TX 3rd harmonic at RF3 OUT at carrier frequency = 2200 MHz | | | | –20 | | dBc |
| **TX In-band Spurious Responses** | | | | | | | |
| | TX In-band spurious CMU setting = 460.9 MHz search freq. ± 5.500 kHz from carrier | TX in-band spurious responses | | | –40 | | dBc |

| Item No. | Description | Measure-ment to section | Min. | Actual | Max. | Measurement uncertainty | Unit |
|---|---|---|---|---|---|---|---|
| | TX In-band spurious<br>CMU setting = 468.1 MHz<br>search freq. ± 5.500 kHz from carrier | | | | –40 | | dBc |
| | TX In-band spurious<br>CMU setting = 489.3 MHz<br>search freq. ± 5.500 kHz from carrier | | | | –40 | | dBc |
| | TX In-band spurious<br>CMU setting = 496.5 MHz<br>search freq. ± 5.500 kHz from carrier | | | | –40 | | dBc |
| | TX In-band spurious<br>CMU setting = 925.5 MHz<br>search freq. ± 5.500 kHz from carrier | | | | –40 | | dBc |
| | TX In-band spurious<br>CMU setting = 960.5 MHz<br>search freq. ± 5.500 kHz from carrier | | | | –40 | | dBc |
| | TX In-band spurious<br>CMU setting = 1805.5 MHz<br>search freq. ± 5.500 kHz from carrier | | | | –40 | | dBc |
| | TX In-band spurious<br>CMU setting = 1880.5 MHz<br>search freq. ± 5.500 kHz from carrier | | | | –40 | | dBc |
| | TX In-band spurious<br>CMU setting = 869.5 MHz<br>search freq. ± 5.500 kHz from carrier | | | | –40 | | dBc |
| | TX In-band spurious<br>CMU setting = 894.5 MHz<br>search freq. ± 5.500 kHz from carrier | | | | –40 | | dBc |
| | TX In-band spurious<br>CMU setting = 1930.5 MHz<br>search freq. ± 5.500 kHz from carrier | | | | –40 | | dBc |
| | TX In-band spurious<br>CMU setting = 1990.5 MHz<br>search freq. ± 5.500 kHz from carrier | | | | –40 | | dBc |
| | TX In-band spurious<br>CMU setting = 1920.5 MHz<br>search freq. ± 5.500 kHz from carrier | | | | –40 | | dBc |
| | TX In-band spurious<br>CMU setting = 1980.5 MHz<br>search freq. ± 5.500 kHz from carrier | | | | –40 | | dBc |
| | TX In-band spurious<br>CMU setting = 2110.5 MHz<br>search freq. ± 5.500 kHz from carrier | | | | –40 | | dBc |
| | TX In-band spurious<br>CMU setting = 2170.5 MHz<br>search freq. ± 5.500 kHz from carrier | | | | –40 | | dBc |
| **TX Fixed Spurious Responses** | | | | | | | |
| | TX fixed spurious,<br>CMU setting = 14.35 MHz<br>search freq. 13.85 MHz<br>Level = –20 dBm | TX fixed spurious | | | –40 | | dBc |

| Item No. | Description | Measure-ment to section | Min. | Actual | Max. | Measurement uncertainty | Unit |
|---|---|---|---|---|---|---|---|
| | TX fixed spurious,<br>CMU setting = 37.4333 MHz<br>search freq. 36.9333 MHz<br>Level = –20 dBm | | | | –40 | | dBc |
| | TX fixed spurious,<br>CMU setting = 42.05 MHz<br>search freq. 41.55 MHz<br>Level = –20 dBm | | | | –40 | | dBc |
| | TX fixed spurious,<br>CMU setting = 111.3 MHz<br>search freq. 110.8 MHz<br>Level = –20 dBm | | | | –40 | | dBc |
| | TX fixed spurious,<br>CMU setting = 222.1 MHz<br>search freq. 221.6 MHz<br>Level = –20 dBm | | | | –40 | | dBc |
| | TX fixed spurious,<br>CMU setting = 332.9 MHz<br>search freq. 332.4 MHz<br>Level = –20 dBm | | | | –40 | | dBc |
| | TX fixed spurious,<br>CMU setting = 501.87 MHz<br>search freq. 501.37 MHz<br>Level = –20 dBm | | | | –40 | | dBc |
| | TX fixed spurious,<br>CMU setting = 1330.1 MHz<br>search freq. 1329.6 MHz<br>Level = 0 dBm | | | | –40 | | dBc |
| | TX fixed spurious,<br>CMU setting = 100 MHz<br>search freq. 1917.12 MHz<br>Level = 0 dBm | | | | –40 | | dBc |
| | TX fixed spurious,<br>CMU setting = 1300 MHz<br>search freq. 2142.08 MHz<br>Level = 0 dBm | | | | –40 | | dBc |
| | TX fixed spurious,<br>CMU setting = 2200 MHz<br>search freq. 3042.08 MHz<br>Level = 0 dBm | | | | –40 | | dBc |
| | TX fixed spurious,<br>CMU setting = 100 MHz<br>search freq. 86.15 MHz<br>Level = +10 dBm | | | | –40 | | dBc |
| | TX fixed spurious,<br>CMU setting = 100 MHz<br>search freq. 113.85 MHz<br>Level = +10 dBm | | | | –40 | | dBc |

| Item No. | Description | Measure-ment to section | Min. | Actual | Max. | Measurement uncertainty | Unit |
|---|---|---|---|---|---|---|---|
| | TX fixed spurious,<br>CMU setting = 100 MHz<br>search freq. 1817.12 MHz<br>Level = +10 dBm | | | | –40 | | dBc |
| | TX fixed spurious,<br>CMU setting = 100 MHz<br>search freq. 1917.12 MHz<br>Level = +10 dBm | | | | –40 | | dBc |
| | TX fixed spurious,<br>CMU setting = 900 MHz<br>search freq. 917.12 MHz<br>Level = +10 dBm | | | | –40 | | dBc |
| | TX fixed spurious,<br>CMU setting = 900 MHz<br>search freq. 1817.12 MHz<br>Level = +10 dBm | | | | –40 | | dBc |
| | TX fixed spurious,<br>CMU setting = 1199 MHz<br>search freq. 618.12 MHz<br>Level = +10 dBm | | | | –40 | | dBc |
| | TX fixed spurious,<br>CMU setting = 1199 MHz<br>search freq. 1817.12 MHz<br>Level = +10 dBm | | | | –40 | | dBc |
| | TX fixed spurious,<br>CMU setting = 1201 MHz<br>search freq. 842.08 MHz<br>Level = +10 dBm | | | | –40 | | dBc |
| | TX fixed spurious,<br>CMU setting = 1201 MHz<br>search freq. 1684.16 MHz<br>Level = +10 dBm | | | | –40 | | dBc |
| | TX fixed spurious,<br>CMU setting = 1201 MHz<br>search freq. 2043.08 MHz<br>Level = +10 dBm | | | | –40 | | dBc |
| | TX fixed spurious,<br>CMU setting = 1201 MHz<br>search freq. 2885.16 MHz<br>Level = +10 dBm | | | | –40 | | dBc |
| | TX fixed spurious,<br>CMU setting = 1700 MHz<br>search freq. 842.08 MHz<br>Level = +10 dBm | | | | –40 | | dBc |
| | TX fixed spurious,<br>CMU setting = 1700 MHz<br>search freq. 2542.08 MHz<br>Level = +10 dBm | | | | –40 | | dBc |

| Item No. | Description | Measure-ment to section | Min. | Actual | Max. | Measurement uncertainty | Unit |
|---|---|---|---|---|---|---|---|
| | TX fixed spurious,<br>CMU setting = 1800 MHz<br>search freq. 842.08 MHz<br>Level = +10 dBm | | | | –40 | | dBc |
| | TX fixed spurious,<br>CMU setting = 1800 MHz<br>search freq. 1684.16 MHz<br>Level = +10 dBm | | | | –40 | | dBc |
| | TX fixed spurious,<br>CMU setting = 1800 MHz<br>search freq. 2642.08 MHz<br>Level = +10 dBm | | | | –40 | | dBc |
| | TX fixed spurious,<br>CMU setting = 1900 MHz<br>search freq. 842.08 MHz<br>Level = +10 dBm | | | | –40 | | dBc |
| | TX fixed spurious,<br>CMU setting = 1900 MHz<br>search freq. 1057.92 MHz<br>Level = +10 dBm | | | | –40 | | dBc |
| | TX fixed spurious,<br>CMU setting = 1900 MHz<br>search freq. 1684.16 MHz<br>Level = +10 dBm | | | | –40 | | dBc |
| | TX fixed spurious,<br>CMU setting = 1900 MHz<br>search freq. 2742.08 MHz<br>Level = +10 dBm | | | | –40 | | dBc |
| | TX fixed spurious,<br>CMU setting = 2199 MHz<br>search freq. 842.08 MHz<br>Level = +10 dBm | | | | –40 | | dBc |
| | TX fixed spurious,<br>CMU setting = 2199 MHz<br>search freq. 1356.92 MHz<br>Level = +10 dBm | | | | –40 | | dBc |
| | TX fixed spurious,<br>CMU setting = 2199 MHz<br>search freq. 1684.16 MHz<br>Level = +10 dBm | | | | –40 | | dBc |
| | TX fixed spurious,<br>CMU setting = 2199 MHz<br>search freq. 3041.08 MHz<br>Level = +10 dBm | | | | –40 | | dBc |
| **TX SSB Phase Noise** | | | | | | | |
| | TX SSB phase noise<br>f = 100 MHz, Δf = 20 kHz | TX SSB phase noise | | | –100 | | dBc |
| | TX SSB phase noise<br>f = 100 MHz, Δf = 250 kHz | | | | –110 | | dBc |

| Item No. | Description | Measure-ment to section | Min. | Actual | Max. | Measurement uncertainty | Unit |
|---|---|---|---|---|---|---|---|
| | TX SSB phase noise<br>f = 100 MHz, Δf = 400 kHz | | | | –110 | | dBc |
| | TX SSB phase noise<br>f = 100 MHz, Δf = 1990 kHz | | | | –110 | | dBc |
| | TX SSB phase noise<br>f = 945 MHz, Δf = 20 kHz | | | | –100 | | dBc |
| | TX SSB phase noise<br>f = 945 MHz, Δf = 250 kHz | | | | –110 | | dBc |
| | TX SSB phase noise<br>f = 945 MHz, Δf = 400 kHz | | | | –110 | | dBc |
| | TX SSB phase noise<br>f = 945 MHz, Δf = 1990 kHz | | | | –110 | | dBc |
| | TX SSB phase noise<br>f = 1850 MHz, Δf = 20 kHz | | | | –100 | | dBc |
| | TX SSB phase noise<br>f = 1850 MHz, Δf = 250 kHz | | | | –110 | | dBc |
| | TX SSB phase noise<br>f = 1850 MHz, Δf = 400 kHz | | | | –110 | | dBc |
| | TX SSB phase noise<br>f = 1850 MHz, Δf = 1990 kHz | | | | –110 | | dBc |
| | TX SSB phase noise<br>f = 2200 MHz, Δf = 20 kHz | | | | –100 | | dBc |
| | TX SSB phase noise<br>f = 2200 MHz, Δf = 250 kHz | | | | –110 | | dBc |
| | TX SSB phase noise<br>f = 2200 MHz, Δf = 400 kHz | | | | –110 | | dBc |
| | TX SSB phase noise<br>f = 2200 MHz, Δf = 1990 kHz | | | | –110 | | dBc |
| **TX Residual FM** | | | | | | | |
| | TX Residual FM at 1000 MHz<br>30 Hz to 15 kHz, rms | | | | 50 | | Hz |
| | TX Residual FM at 1000 MHz<br>30 Hz to 15 kHz, peak | | | | 200 | | Hz |
| | TX Residual FM at 1000 MHz<br>CCITT, rms | | | | 5 | | Hz |
| | TX Residual FM at 2000 MHz<br>30 Hz to 15 kHz, rms | | | | 50 | | Hz |
| | TX Residual FM at 2000 MHz<br>30 Hz to 15 kHz, peak | | | | 200 | | Hz |
| | TX Residual FM at 2000 MHz<br>CCITT, rms | | | | 5 | | Hz |
| **TX Residual AM** | | | | | | | |
| | TX Residual AM at 500 MHz<br>CCITT, rms | | | | 0.02 | | % |
| | TX Residual AM at 1000 MHz<br>CCITT, rms | | | | 0.02 | | % |

| Item No. | Description | Measurement to section | Min. | Actual | Max. | Measurement uncertainty | Unit |
|---|---|---|---|---|---|---|---|
| | TX Residual AM at 1500 MHz CCITT, rms | | | | 0.02 | | % |
| | TX Residual AM at 2200 MHz CCITT, rms | | | | 0.02 | | % |
| **TX Modulation characteristics** | | | | | | | |
| | TX Modulation characteristics carrier suppression, $f_{mod}$ = 10 kHz, $f_{RF}$ = 1000 MHz | | | | –40 | | dBc |
| | TX Modulation characteristics carrier suppression, $f_{mod}$ = –20 kHz, $f_{RF}$ = 1000 MHz | | | | –40 | | dBc |
| | TX Modulation characteristics carrier suppression, $f_{mod}$ = 20 kHz, $f_{RF}$ = 1000 MHz | | | | –40 | | dBc |
| | TX Modulation characteristics carrier suppression, $f_{mod}$ = 30 kHz, $f_{RF}$ = 1000 MHz | | | | –40 | | dBc |
| | TX Modulation characteristics carrier suppression, $f_{mod}$ = 60 kHz, $f_{RF}$ = 1000 MHz | | | | –40 | | dBc |
| | TX Modulation characteristics carrier suppression, $f_{mod}$ = 100 kHz, $f_{RF}$ = 1000 MHz | | | | –40 | | dBc |
| | TX Modulation characteristics carrier suppression, $f_{mod}$ = 135 kHz, $f_{RF}$ = 1000 MHz | | | | –40 | | dBc |
| | TX Modulation characteristics carrier suppression, $f_{mod}$ = –135 kHz, $f_{RF}$ = 1000 MHz | | | | –40 | | dBc |
| **RX Harmonics** | | | | | | | |
| | RX 2nd harmonic at RF2 , $f_{IN}$ = 50 MHz, CMU frequency = 100 MHz | RX harmonics | | | –30 | | dBc |
| | RX 2nd harmonic at RF2 fIN = 600 MHz, CMU frequency = 1200 MHz | | | | –30 | | dBc |
| | RX 2nd harmonic at RF2 , $f_{IN}$ = 625 MHz, CMU frequency = 1250 MHz | | | | –30 | | dBc |
| | RX 2nd harmonic at RF2 , $f_{IN}$ = 1100 MHz, CMU frequency = 2200 MHz | | | | –30 | | dBc |
| | RX 3rd harmonic at RF2 , $f_{IN}$ = 50 MHz, CMU frequency = 150 MHz | | | | –30 | | dBc |
| | RX 3rd harmonic at RF2 , $f_{IN}$ = 400 MHz, CMU frequency = 1200 MHz | | | | –30 | | dBc |
| | RX 3rd harmonic at RF2 , $f_{IN}$ = 420 MHz, CMU frequency = 1260 MHz | | | | –30 | | dBc |
| | RX 3rd harmonic at RF2 , $f_{IN}$ = 730 MHz, CMU frequency = 2190 MHz | | | | –30 | | dBc |
| | RX 2nd harmonic at RF4 IN , $f_{IN}$ = 50 MHz, CMU frequency = 100 MHz | | | | –20 | | dBc |
| | RX 2nd harmonic at RF4 IN , $f_{IN}$ = 600 MHz, CMU frequency = 1200 MHz | | | | –20 | | dBc |

| Item No. | Description | Measure-ment to section | Min. | Actual | Max. | Measurement uncertainty | Unit |
|---|---|---|---|---|---|---|---|
| | RX 2nd harmonic at RF4 IN , $f_{IN}$ = 625 MHz, CMU frequency = 1250 MHz | | | | –20 | | dBc |
| | RX 2nd harmonic at RF4 IN , $f_{IN}$ = 1100 MHz, CMU frequency = 2200 MHz | | | | –20 | | dBc |
| | RX 3rd harmonic at RF4 IN , $f_{IN}$ = 50 MHz, CMU frequency = 150 MHz | | | | –20 | | dBc |
| | RX 3rd harmonic at RF4 IN , $f_{IN}$ = 400 MHz, CMU frequency = 1200 MHz | | | | –20 | | dBc |
| | RX 3rd harmonic at RF4 IN , $f_{IN}$ = 420 MHz, CMU frequency = 1260 MHz | | | | –20 | | dBc |
| | RX 3rd harmonic at RF4 IN , $f_{IN}$ = 730 MHz, CMU frequency = 2190 MHz | | | | –20 | | dBc |
| **RX Spurious Response** | | | | | | | |
| | RX inherent spurious response at RF2, $f_{IN}$ = 1876.03 MHz, CMU frequency = 903 MHz | RX Spurious response | | | –50 | | dBc |
| | RX inherent spurious response at RF2, $f_{IN}$ = 881.6 MHz, CMU frequency = 903 MHz | | | | –50 | | dBc |
| | RX inherent spurious response at RF2, $f_{IN}$ = 843.085 MHz, CMU frequency = 200 MHz | | | | –50 | | dBc |
| | RX inherent spurious response at RF2, $f_{IN}$ = 421.5425 MHz, CMU frequency = 200 MHz | | | | –50 | | dBc |
| | RX inherent spurious response at RF2, $f_{IN}$ = 908.0575 MHz, CMU frequency = 300 MHz | | | | –50 | | dBc |
| | RX inherent spurious response at RF2, $f_{IN}$ = 605.3716667 MHz, CMU frequency = 300 MHz | | | | –50 | | dBc |
| | RX inherent spurious response at RF2, $f_{IN}$ = 454.02875 MHz, CMU frequency = 300 MHz | | | | –50 | | dBc |
| | RX inherent spurious response at RF2, $f_{IN}$ = 500 MHz, CMU frequency = 505.35 MHz | | | | –50 | | dBc |
| | RX inherent spurious response at RF2, $f_{IN}$ = 968.0575 MHz, CMU frequency = 60 MHz | | | | –50 | | dBc |
| | RX inherent spurious response at RF2, $f_{IN}$ = 1200 MHz, CMU frequency = 291.9425 MHz | | | | –50 | | dBc |
| | RX inherent spurious response at RF2, $f_{IN}$ = 645.3716667 MHz, CMU frequency = 60 MHz | | | | –50 | | dBc |
| | RX inherent spurious response at RF2, $f_{IN}$ = 1200 MHz, CMU frequency = 891.9425 MHz | | | | –50 | | dBc |
| | RX inherent spurious response at RF2, $f_{IN}$ = 1936.115 MHz, CMU frequency = 60 MHz | | | | –50 | | dBc |

| Item No. | Description | Measure-ment to section | Min. | Actual | Max. | Measurement uncertainty | Unit |
|---|---|---|---|---|---|---|---|
| | RX inherent spurious response at RF2, $f_{IN}$ = 2200 MHz, CMU frequency = 191.9425 MHz | | | | –50 | | dBc |
| | RX inherent spurious response at RF2, $f_{IN}$ = 1226.97 MHz, CMU frequency = 2200 MHz | | | | –50 | | dBc |
| | RX inherent spurious response at RF2, $f_{IN}$ = 1821.4 MHz, CMU frequency = 1800 MHz | | | | –50 | | dBc |
| | RX inherent spurious response at RF2, $f_{IN}$ = 2936.17 MHz, CMU frequency = 1250 MHz | | | | –50 | | dBc |
| | RX inherent spurious response at RF2, $f_{IN}$ = 843.085 MHz, CMU frequency = 2200 MHz | | | | –50 | | dBc |
| | RX inherent spurious response at RF2, $f_{IN}$ = 421.5425 MHz, CMU frequency = 2200 MHz | | | | –50 | | dBc |
| | RX inherent spurious response at RF2, $f_{IN}$ = 281.0283333 MHz, CMU frequency = 2200 MHz | | | | –50 | | dBc |
| | RX inherent spurious response at RF2, $f_{IN}$ = 1816.115 MHz, CMU frequency = 2200 MHz | | | | –50 | | dBc |
| | RX inherent spurious response at RF2, $f_{IN}$ = 908.0575 MHz, CMU frequency = 2200 MHz | | | | –50 | | dBc |
| | RX inherent spurious response at RF2, $f_{IN}$ = 605.3716667 MHz, CMU frequency = 2200 MHz | | | | –50 | | dBc |
| | RX inherent spurious response at RF2, $f_{IN}$ = 1671.5425 MHz, CMU frequency = 1250 MHz | | | | –50 | | dBc |
| | RX inherent spurious response at RF2, $f_{IN}$ = 2200 MHz, CMU frequency = 1778.4575 MHz | | | | –50 | | dBc |
| | RX inherent spurious response at RF2, $f_{IN}$ = 1812.056667 MHz, CMU frequency = 1250 MHz | | | | –50 | | dBc |
| | RX inherent spurious response at RF2, $f_{IN}$ = 1681.5425 MHz, CMU frequency = 1680 MHz | | | | –50 | | dBc |
| | RX inherent spurious response at RF2, $f_{IN}$ = 1468.085 MHz, CMU frequency = 1250 MHz | | | | –50 | | dBc |
| | RX inherent spurious response at RF2, $f_{IN}$ = 1683.085 MHz, CMU frequency = 1680 MHz | | | | –50 | | dBc |
| | RX inherent spurious response at RF2, $f_{IN}$ = 1943.085 MHz, CMU frequency = 2200 MHz | | | | –50 | | dBc |
| | RX inherent spurious response at RF2, $f_{IN}$ = 978.7233333 MHz, CMU frequency = 1250 MHz | | | | –50 | | dBc |

| Item No. | Description | Measure-ment to section | Min. | Actual | Max. | Measurement uncertainty | Unit |
|---|---|---|---|---|---|---|---|
| | RX inherent spurious response at RF2, $f_{IN}$ = 1295.39 MHz, CMU frequency = 2200 MHz | | | | –50 | | dBc |
| | RX inherent spurious response at RF2, $f_{IN}$ = 1210.843333 MHz, CMU frequency = 1210.743333 MHz | | | | –50 | | dBc |
| | RX inherent spurious response at RF2, $f_{IN}$ = 1262.31375 MHz, CMU frequency = 1260 MHz | | | | –50 | | dBc |
| | RX inherent spurious response at RF4 IN, $f_{IN}$ = 968.0575 MHz, CMU frequency = 60 MHz | | | | –50 | | dBc |
| | RX inherent spurious response at RF4 IN, $f_{IN}$ = 1200 MHz, CMU frequency = 291.9425 MHz | | | | –50 | | dBc |
| | RX inherent spurious response at RF4 IN, $f_{IN}$ = 645.3716667 MHz, CMU frequency = 60 MHz | | | | –50 | | dBc |
| | RX inherent spurious response at RF4 IN, $f_{IN}$ = 1200 MHz, CMU frequency = 891.9425 MHz | | | | –50 | | dBc |
| | RX inherent spurious response at RF4 IN, $f_{IN}$ = 1936.115 MHz, CMU frequency = 60 MHz | | | | –50 | | dBc |
| | RX inherent spurious response at RF4 IN, $f_{IN}$ = 2200 MHz, CMU frequency = 191.9425 MHz | | | | –50 | | dBc |
| | RX inherent spurious response at RF4 IN, $f_{IN}$ = 1671.5425 MHz, CMU frequency = 1250 MHz | | | | –50 | | dBc |
| | RX inherent spurious response at RF4 IN, $f_{IN}$ = 2200 MHz, CMU frequency = 1778.4575 MHz | | | | –50 | | dBc |
| | RX inherent spurious response at RF4 IN, $f_{IN}$ = 1812.056667 MHz, CMU frequency = 1250 MHz | | | | –50 | | dBc |
| | RX inherent spurious response at RF4 IN, $f_{IN}$ = 1681.5425 MHz, CMU frequency = 1680 MHz | | | | –50 | | dBc |
| | RX inherent spurious response at RF4 IN, $f_{IN}$ = 1468.085 MHz, CMU frequency = 1250 MHz | | | | –50 | | dBc |
| | RX inherent spurious response at RF4 IN, $f_{IN}$ = 1683.085 MHz, CMU frequency = 1680 MHz | | | | –50 | | dBc |
| | RX inherent spurious response at RF4 IN, $f_{IN}$ = 1943.085 MHz, CMU frequency = 2200 MHz | | | | –50 | | dBc |
| | RX inherent spurious response at RF4 IN, $f_{IN}$ = 978.7233333 MHz, CMU frequency = 1250 MHz | | | | –50 | | dBc |
| | RX inherent spurious response at RF4 IN, $f_{IN}$ = 1295.39 MHz, CMU frequency = 2200 MHz | | | | –50 | | dBc |

| Item No. | Description | Measure-ment to section | Min. | Actual | Max. | Measurement uncertainty | Unit |
|---|---|---|---|---|---|---|---|
| | RX inherent spurious response at RF4 IN, $f_{IN}$ = 1210.843333 MHz, CMU frequency = 1210.743333 MHz | | | | –50 | | dBc |
| | RX inherent spurious response at RF4 IN, $f_{IN}$ = 1262.31375 MHz, CMU frequency = 1260 MHz | | | | –50 | | dBc |
| **RX SSB Phase Noise** | | | | | | | |
| | RX SSB phase noise at RF2 f = 100 MHz, Δf = +20 kHz | RX SSB phase noise | | | –100 | | |
| | RX SSB phase noise at RF2 f = 100 MHz, Δf = +250 kHz | | | | –110 | | |
| | RX SSB phase noise at RF2 f = 100 MHz, Δf = +400 kHz | | | | –118 | | |
| | RX SSB phase noise at RF2 f = 100 MHz, Δf = +1990 kHz | | | | –118 | | |
| | RX SSB phase noise at RF2 f = 945 MHz, Δf = +20 kHz | | | | –100 | | dBc/Hz |
| | RX SSB phase noise at RF2 f = 945 MHz, Δf = +250 kHz | | | | –110 | | dBc/Hz |
| | RX SSB phase noise at RF2 f = 945 MHz, Δf = +400 kHz | | | | –118 | | dBc/Hz |
| | RX SSB phase noise at RF2 f = 945 MHz, Δf = +1990 kHz | | | | –118 | | dBc/Hz |
| | RX SSB phase noise at RF2 f = 1850 MHz, Δf = –20 kHz | | | | –100 | | dBc/Hz |
| | RX SSB phase noise at RF2 f = 1850 MHz, Δf = —250 kHz | | | | –110 | | dBc/Hz |
| | RX SSB phase noise at RF2 f = 1850 MHz, Δf = —400 kHz | | | | –118 | | dBc/Hz |
| | RX SSB phase noise at RF2 f = 1850 MHz, Δf = —1990 kHz | | | | –118 | | dBc/Hz |
| | RX SSB phase noise at RF2 f = 2200 MHz, Δf = –20 kHz | | | | –100 | | dBc/Hz |
| | RX SSB phase noise at RF2 f = 2200 MHz, Δf = –250 kHz | | | | –110 | | dBc/Hz |
| | RX SSB phase noise at RF2 f = 2200 MHz, Δf = –400 kHz | | | | –118 | | dBc/Hz |
| | RX SSB phase noise at RF2 f = 2200 MHz, Δf = –1990 kHz | | | | –118 | | dBc/Hz |
| **RX Residual FM/AM** | | | | | | | |
| | RX Residual FM at 500 MHz at RF4 IN, –20 dBm 30Hz to 15 kHz, rms | RX residual FM/AM | | | 50 | | Hz |
| | RX Residual FM at 500 MHz at RF4 IN, –20 dBm 30Hz to 15 kHz, peak | | | | 200 | | Hz |

| Item No. | Description | Measure-ment to section | Min. | Actual | Max. | Measurement uncertainty | Unit |
|---|---|---|---|---|---|---|---|
| | RX Residual FM at 500 MHz at RF4 IN, –20 dBm CCITT, rms | | | | 5 | | Hz |
| | RX Residual AM at 500 MHz at RF4 IN, –20 dBm CCITT, rms | | | | 0.02 | | % |
| | RX Residual FM at 900 MHz at RF4 IN, –20 dBm 30Hz to 15 kHz, rms | | | | 50 | | Hz |
| | RX Residual FM at 900 MHz at RF4 IN, –20 dBm 30Hz to 15 kHz, peak | | | | 200 | | Hz |
| | RX Residual FM at 900 MHz at RF4 IN, –20 dBm CCITT, rms | | | | 5 | | Hz |
| | RX Residual AM at 900 MHz at RF4 IN, –20 dBm CCITT, rms | | | | 0.02 | | % |
| | RX Residual FM at 1900 MHz at RF4 IN, –20 dBm 30Hz to 15 kHz, rms | | | | 50 | | Hz |
| | RX Residual FM at 1900 MHz at RF4 IN, –20 dBm 30Hz to 15 kHz, peak | | | | 200 | | Hz |
| | RX Residual FM at 1900 MHz at RF4 IN, –20 dBm CCITT, rms | | | | 5 | | Hz |
| | RX Residual AM at 1900 MHz at RF4 IN, –20 dBm CCITT, rms | | | | 0.02 | | % |
| | RX Residual FM at 2100 MHz at RF4 IN, –20 dBm 30Hz to 15 kHz, rms | | | | 50 | | Hz |
| | RX Residual FM at 2100 MHz at RF4 IN, –20 dBm 30Hz to 15 kHz, peak | | | | 200 | | Hz |
| | RX Residual FM at 2100 MHz at RF4 IN, –20 dBm CCITT, rms | | | | 5 | | Hz |
| | RX Residual AM at 2100 MHz at RF4 IN, –20 dBm CCITT, rms | | | | 0.02 | | % |
| | RX Residual FM at 2500 MHz at RF4 IN, –20 dBm 30Hz to 15 kHz, rms | | | | 50 | | Hz |
| | RX Residual FM at 2500 MHz at RF4 IN, –20 dBm 30Hz to 15 kHz, peak | | | | 200 | | Hz |
| | RX Residual FM at 2500 MHz at RF4 IN, –20 dBm CCITT, rms | | | | 5 | | Hz |
| | RX Residual AM at 2500 MHz at RF4 IN, –20 dBm CCITT, rms | | | | 0.02 | | % |

| Item No. | Description | Measure-ment to section | Min. | Actual | Max. | Measurement uncertainty | Unit |
|---|---|---|---|---|---|---|---|
| **RX Average Noise Level** | | | | | | | |
| | RX average noise level<br>RF1, RBW = 1 kHz,<br>expPow = 47 dBm, f = 10 MHz | RX average noise level | | | –100 | | dBc |
| | RX average noise level<br>RF1, RBW = 1 kHz,<br>expPow = 47 dBm, f = 500 MHz | | | | –100 | | dBc |
| | RX average noise level<br>RF1, RBW = 1 kHz,<br>expPow = 47 dBm, f = 1000 MHz | | | | –100 | | dBc |
| | RX average noise level<br>RF1, RBW = 1 kHz,<br>expPow = 47 dBm, f = 1500 MHz | | | | –100 | | dBc |
| | RX average noise level<br>RF1, RBW = 1 kHz,<br>expPow = 47 dBm, f = 2200 MHz | | | | –100 | | dBc |
| | RX average noise level<br>RF1, RBW = 1 kHz,<br>expPow = 47 dBm, f = 2700 MHz | | | | –95 | | dBc |
| | RX average noise level<br>RF1, RBW = 1 kHz,<br>expPow = 10 dBm, f = 10 MHz | | | | –100 | | dBc |
| | RX average noise level<br>RF1, RBW = 1 kHz,<br>expPow = 10 dBm, f = 500 MHz | | | | –100 | | dBc |
| | RX average noise level<br>RF1, RBW = 1 kHz,<br>expPow = 10 dBm, f = 1000 MHz | | | | –100 | | dBc |
| | RX average noise level<br>RF1, RBW = 1 kHz,<br>expPow = 10 dBm, f = 1500 MHz | | | | –100 | | dBc |
| | RX average noise level<br>RF1, RBW = 1 kHz,<br>expPow = 10 dBm, f = 2200 MHz | | | | –100 | | dBc |
| | RX average noise level<br>RF1, RBW = 1 kHz,<br>expPow = 10 dBm, f = 2700 MHz | | | | –95 | | dBc |
| | RX average noise level<br>RF2, RBW = 500 kHz,<br>expPow = 33 dBm, f = 10 MHz | | | | –73 | | dBc |
| | RX average noise level<br>RF2, RBW = 500 kHz,<br>expPow = 33 dBm, f = 500 MHz | | | | –73 | | dBc |
| | RX average noise level<br>RF2, RBW = 500 kHz,<br>expPow = 33 dBm, f = 1000 MHz | | | | –73 | | dBc |
| | RX average noise level<br>RF2, RBW = 500 kHz,<br>expPow = 33 dBm, f = 1500 MHz | | | | –73 | | dBc |
| | RX average noise level<br>RF2, RBW = 500 kHz,<br>expPow = 33 dBm, f = 2200 MHz | | | | –73 | | dBc |

| Item No. | Description | Measure-ment to section | Min. | Actual | Max. | Measurement uncertainty | Unit |
|---|---|---|---|---|---|---|---|
| | RX average noise level<br>RF2, RBW = 500 kHz,<br>expPow = 33 dBm, f = 2700 MHz | | | | –68 | | dBc |
| | RX average noise level<br>RF2, RBW = 500 kHz,<br>expPow = –4 dBm, f = 10 MHz | | | | –73 | | dBc |
| | RX average noise level<br>RF2, RBW = 500 kHz,<br>expPow = –4 dBm, f = 500 MHz | | | | –73 | | dBc |
| | RX average noise level<br>RF2, RBW = 500 kHz,<br>expPow = –4 dBm, f = 1000 MHz | | | | –73 | | dBc |
| | RX average noise level<br>RF2, RBW = 500 kHz,<br>expPow = –4 dBm, f = 1500 MHz | | | | –73 | | dBc |
| | RX average noise level<br>RF2, RBW = 500 kHz,<br>expPow = –4 dBm, f = 2200 MHz | | | | –73 | | dBc |
| | RX average noise level<br>RF2, RBW = 500 kHz,<br>expPow = –4 dBm, f = 2700 MHz | | | | –68 | | dBc |
| | RX average noise level<br>RF4 IN, RBW = 1 kHz,<br>expPow = –22 dBm, f = 10 MHz | | | | –100 | | dBc |
| | RX average noise level<br>RF4 IN, RBW = 1 kHz,<br>expPow = 0 dBm, f = 500 MHz | | | | –100 | | dBc |
| | RX average noise level<br>RF4 IN, RBW = 1 kHz,<br>expPow = 0 dBm, f = 1000 MHz | | | | –100 | | dBc |
| | RX average noise level<br>RF4 IN, RBW = 1 kHz,<br>expPow = 0 dBm, f = 1500 MHz | | | | –100 | | dBc |
| | RX average noise level<br>RF4 IN, RBW = 1 kHz,<br>expPow = 0 dBm, f = 2200 MHz | | | | –100 | | dBc |
| | RX average noise level<br>RF4 IN, RBW = 1 kHz,<br>expPow = 0 dBm, f = 2700 MHz | | | | –95 | | dBc |
| | RX average noise level<br>RF4 IN, RBW = 1 kHz,<br>expPow = –22 dBm, f = 10 MHz | | | | –100 | | dBc |
| | RX average noise level<br>RF4 IN, RBW = 1 kHz,<br>expPow = –22 dBm, f = 500 MHz | | | | –100 | | dBc |
| | RX average noise level<br>RF4 IN, RBW = 1 kHz,<br>expPow = –22 dBm, f = 1000 MHz | | | | –100 | | dBc |
| | RX average noise level<br>RF4 IN, RBW = 1 kHz,<br>expPow = –22 dBm, f = 1500 MHz | | | | –100 | | dBc |
| | RX average noise level<br>RF4 IN, RBW = 1 kHz,<br>expPow = –22 dBm, f = 2200 MHz | | | | –100 | | dBc |

| Item No. | Description | Measure-ment to section | Min. | Actual | Max. | Measurement uncertainty | Unit |
|---|---|---|---|---|---|---|---|
| | RX average noise level<br>RF4 IN, RBW = 1 kHz,<br>expPow = –22 dBm, f = 2700 MHz | | | | –95 | | dBc |

### TX Generator level error at RF1 (measurement on frequency cal. points)

| | | |
|---|---|---|
| Frequency MHz | 10, 100, 200, 300, 400, 500, 600, 700, 800, 1000, 1100, 1200, 1300, 1400, 1500, 1600, 1700, , 2100, 2200, 2300, 2400, 2500, 2600, 2700 | 820, 840, 860, 880, 900, 920, 940, 960, 1710, 1730, 1750, 1770, 1790, 1810, 1830, 1850, 1870, 1890, 1910, 1930, 1950, 1970, 1990 |
| Level in dBm | –33, –55, –73, –87, –106, –117, –130 | –33, –55, –73, –87, –106, –117, –130 |
| Tolerance | See data sheet:<br>Base Unit RF Generator | See data sheet:<br>GSM Specification RF Generator |

### TX Generator level error at RF2 (measurement on frequency cal. points)

| | | |
|---|---|---|
| Frequency MHz | 10, 100, 200, 300, 400, 500, 600, 700, 800, 1000, 1100, 1200, 1300, 1400, 1500, 1600, 1700, , 2100, 2200, 2300, 2400, 2500, 2600, 2700 | 820, 840, 860, 880, 900, 920, 940, 960, 1710, 1730, 1750, 1770, 1790, 1810, 1830, 1850, 1870, 1890, 1910, 1930, 1950, 1970, 1990 |
| Level in dBm | –16, –41, –59, –73, –95, –106, –117 | –16, –41, –59, –73, –95, –106, –117 |
| Tolerance | See data sheet:<br>Base Unit RF Generator | See data sheet:<br>GSM Specification RF Generator |

### TX Generator level error at RF3 OUT (measurement on frequency cal. points)

| | | |
|---|---|---|
| Frequency MHz | 10, 100, 200, 300, 400, 500, 600, 700, 800, 1000, 1100, 1200, 1300, 1400, 1500, 1600, 1700, , 2100, 2200, 2300, 2400, 2500, 2600, 2700 | 820, 840, 860, 880, 900, 920, 940, 960, 1710, 1730, 1750, 1770, 1790, 1810, 1830, 1850, 1870, 1890, 1910, 1930, 1950, 1970, 1990 |
| Level in dBm | +5, –18, –36, –50, –72, –80, –90 | +5, –18, –36, –50, –72, –80, –90 |
| Tolerance | See data sheet:<br>Base Unit RF Generator | See data sheet:<br>GSM Specification RF Generator |

### RX Power meter (frequency selective) level error at RF1 (measurement on frequency cal. points)

| | | |
|---|---|---|
| Frequency in MHz | 50, 100, 200, 300, 400, 500, 600, 700, 800, 1000, 1100, 1200, 1300, 1400, 1500, 1600, 1700, , 2000, 2100, 2200, 2300, 2400, 2500, 2600, 2700 | 450, 470, 490, 820, 840, 860, 880, 900, 920, 940, 960, 1720, 1740, 1760, 1780, 1800, 1820, 1840, 1860, 1880, 1900, 1920, 1940, 1960, 1980 |
| Level in dBm | +47, +40, +33, +30, +25, +20, +15, +10, +6, 0, –5, –10, –15, –20, - 25, –30, –35, –40<br>Note: P = –40 dBm is valid for f = 50 MHz to 2200 MHz only | +47, +40, +33, +30, +25, +20, +15, +10, +6, 0, –5, –10, –15, –20, - 25, –30, –35, –40<br>Note: P = –40 dBm is valid for f = 50 MHz to 2200 MHz only |
| Tolerance | See data sheet:<br>Base Unit RF Analyzer | See data sheet:<br>GSM Specification RF Analyzer |

### RX Power meter (frequency selective) level error at RF2 (measurement on frequency cal. points)

| | | |
|---|---|---|
| Frequency in MHz | 50, 100, 200, 300, 400, 500, 600, 700, 800, 1000, 1100, 1200, 1300, 1400, 1500, 1600, 1700, , 2000, 2100, 2200, 2300, 2400, 2500, 2600, 2700 | 450, 470, 490, 820, 840, 860, 880, 900, 920, 940, 960, 1720, 1740, 1760, 1780, 1800, 1820, 1840, 1860, 1880, 1900, 1920, 1940, 1960, 1980 |
| Level in dBm | +33, +26, +19, +16, +11, +6, +1, –4, –8, –14, –19, –24, - 29, –34, –39, –44, –49, –54<br>Note: P = –54 dBm is valid for f = 50 MHz to 2200 MHz only | +33, +26, +19, +16, +11, +6, +1, –4, –8, –14, –19, –24, –29, –34, –39, –44, –49, –54<br>Note: P = –54 dBm is valid for f = 50 MHz to 2200 MHz only |
| Tolerance | See data sheet: Base Unit RF Analyzer | See data sheet: GSM Specification RF Analyzer |

### RX Power meter (frequency selective) level error at RF4 IN (measurement on frequency cal. points)

| | | |
|---|---|---|
| Frequency in MHz | 50, 100, 200, 300, 400, 500, 600, 700, 800, 1000, 1100, 1200, 1300, 1400, 1500, 1600, 1700, , 2000, 2100, 2200, 2300, 2400, 2500, 2600, 2700 | 450, 470, 490, 820, 840, 860, 880, 900, 920, 940, 960, 1720, 1740, 1760, 1780, 1800, 1820, 1840, 1860, 1880, 1900, 1920, 1940, 1960, 1980 |
| Level in dBm | 0, –6, –9, –14, –19, –24, –29, –33, –39, –44, –49, –54, –59, –64, –69, –74, –80<br>Note: P = –80 dBm is valid for f = 50 MHz to 2200 MHz only | 0, –6, –9, –14, –19, –24, –29, –33, –39, –44, –49, –54, –59, –4, –69, –74, –80<br>Note: P = –80 dBm is valid for f = 50 MHz to 2200 MHz only |
| Tolerance | See data sheet: Base Unit RF Analyzer | See data sheet: GSM Specification RF Analyzer |

### RX Power meter (wideband) level error at RF1 (measurement on frequency cal. points)

| | | |
|---|---|---|
| Frequency in MHz | 50, 100, 200, 300, 400, 500, 600, 700, 800, 1000, 1100, 1200, 1300, 1400, 1500, 1600, 1700, , 2000, 2100, 2200, 2300, 2400, 2500, 2600, 2700 | 450, 470, 490, 820, 840, 860, 880, 900, 920, 940, 960, 1720, 1740, 1760, 1780, 1800, 1820, 1840, 1860, 1880, 1900, 1920, 1940, 1960, 1980 |
| Level in dBm | +47, +40, +33, +30, +25, +20, +15, +10<br>Note: P> +33 dBm is calibrated from 800 MHz to 2000 MHz only; | +47, +40, +33, +30, +25, +20, +15, +10<br>Note: P> +33 dBm is calibrated from 800 MHz to 2000 MHz only; |
| Tolerance | See data sheet: Base Unit RF Analyzer | See data sheet: Base Unit RF Analyzer |

### RX Power meter (wideband) level error at RF2 (measurement on frequency cal. points)

| | | |
|---|---|---|
| Frequency in MHz | 50, 100, 200, 300, 400, 500, 600, 700, 800, 1000, 1100, 1200, 1300, 1400, 1500, 1600, 1700, , 2000, 2100, 2200, 2300, 2400, 2500, 2600, 2700 | 450, 470, 490, 820, 840, 860, 880, 900, 920, 940, 960, 1720, 1740, 1760, 1780, 1800, 1820, 1840, 1860, 1880, 1900, 1920, 1940, 1960, 1980 |
| Level in dBm | +33, +26, +19, +16, +11, +6, +1, –4 | +33, +26, +19, +16, +11, +6, +1, –4 |
| Tolerance | See data sheet: Base Unit RF Analyzer | See data sheet: Base Unit RF Analyzer |

### RX Power meter (wideband) level error at RF4 IN (measurement on frequency cal. points)

| | | |
|---|---|---|
| Frequency in MHz | 50, 100, 200, 300, 400, 500, 600, 700, 800, 1000, 1100, 1200, 1300, 1400, 1500, 1600, 1700, , 2000, 2100, 2200, 2300, 2400, 2500, 2600, 2700 | 450, 470, 490, 820, 840, 860, 880, 900, 920, 940, 960, 1720, 1740, 1760, 1780, 1800, 1820, 1840, 1860, 1880, 1900, 1920, 1940, 1960, 1980 |
| Level in dBm | 0, –6, –9, –14, –19, –24, –29 | 0, –6, –9, –14, –19, –24, –29 |
| Tolerance | See data sheet: Base Unit RF Analyzer | See data sheet: Base Unit RF Analyzer |

**Options for CMU200: CMU-K20, K21, K22, K23, K24, TX Generator GSM Modulation**

Output RF3 OUT, level 10 dBm, GSM Non Signaling
Training Sequence GSM0, Bit Modulation PRBS, Transmission Burst

| | | | | | | | | | |
|---|---|---|---|---|---|---|---|---|---|
| K20 | TX GSM phase error at 460 MHz, peak | GSM Modulation | –4 | | +4 | | ° | | X |
| K20 | TX GSM phase error at 460 MHz, rms | | –1 | | +1 | | ° | | X |
| K20 | TX GSM frequency error at 460 MHz | | –15 | | +15 | | Hz | | X |
| K20 | TX GSM phase error at 496 MHz, peak | | –4 | | +4 | | ° | | X |
| K20 | TX GSM phase error at 496 MHz, rms | | –1 | | +1 | | ° | | X |
| K20 | TX GSM frequency error at 496 MHz | | –15 | | +15 | | Hz | | X |
| K21 | TX GSM phase error at 921 MHz, peak | | –4 | | +4 | | ° | | X |
| K21 | TX GSM phase error at 921 MHz, rms | | –1 | | +1 | | ° | | X |
| K21 | TX GSM frequncy error at 921 MHz | | –15 | | +15 | | Hz | | X |
| K21 | TX GSM phase error at 960 MHz, peak | | –4 | | +4 | | ° | | X |
| K21 | TX GSM phase error at 960 MHz, rms | | –1 | | +1 | | ° | | X |
| K21 | TX GSM frequency error at 960 MHz | | –15 | | +15 | | Hz | | X |
| K22 | TX GSM phase error at 1805 MHz, peak | | –4 | | +4 | | ° | | X |
| K22 | TX GSM phase error at 1805 MHz, rms | | –1 | | 14 | | ° | | X |
| K22 | TX GSM frequency error at 1805 MHz | | –15 | | +15 | | Hz | | X |
| K22 | TX GSM phase error at 1880 MHz, peak | | –4 | | +4 | | ° | | X |
| K22 | TX GSM phase error at 1880 MHz, rms | | –1 | | +1 | | ° | | X |
| K22 | TX GSM frequency error at 1880 MHz | | –15 | | +15 | | Hz | | X |
| K23 | TX GSM phase error at 1930 MHz, peak | | –4 | | +4 | | ° | | X |
| K23 | TX GSM phase error at 1930 MHz, rms | | –1 | | +1 | | ° | | X |
| K23 | TX GSM frequency error at 1930 MHz | | –15 | | +15 | | Hz | | X |
| K23 | TX GSM phase error at 1990 MHz, peak | | –4 | | +4 | | ° | | X |
| K23 | TX GSM phase error at 1990 MHz, rms | | –1 | | +1 | | ° | | X |
| K23 | TX GSM frequency error at 1990 MHz | | –15 | | +15 | | Hz | | X |

| | | | | | | | | | |
|---|---|---|---|---|---|---|---|---|---|
| K24 | TX GSM phase error at 869 MHz, peak | | –4 | | +4 | | ° | | X |
| K24 | TX GSM phase error at 869 MHz, rms | | –1 | | +1 | | ° | | X |
| K24 | TX GSM frequency error at 869 MHz | | –15 | | +15 | | Hz | | X |
| K24 | TX GSM phase error at 894 MHz, peak | | –4 | | +4 | | ° | | X |
| K24 | TX GSM phase error at 894 MHz, rms | | –1 | | +1 | | ° | | X |
| K24 | TX GSM frequency error at 894 MHz | | –15 | | +15 | | Hz | | X |

**Options for CMU200: CMU-K20, K21, K22, K23, K24, RX Analyzer GSM Demodulation**

Input RF2, GSM Non Signaling
Training Sequence GSM0, Trigger Source IF Power, Trigger Level Medium

| | | | | | | | | | |
|---|---|---|---|---|---|---|---|---|---|
| K20 | GSM phase error RX at 450 MHz, peak, level +5 dBm | RX Demodulation | –2 | | +2 | | ° | | X |
| K20 | RX GSM phase error at 450 MHz, rms, level +5 dBm | | –0.6 | | +0.6 | | ° | | X |
| K20 | RX GSM frequency error at 450 MHz, level +5 dBm | | –10 | | +10 | | Hz | | X |
| K20 | RX GSM phase error at 486 MHz, peak, level –14 dBm | | –2 | | +2 | | ° | | X |
| K20 | RX GSM phase error at 486 MHz, rms, level –14 dBm | | –0.6 | | +0.6 | | ° | | X |
| K20 | RX GSM frequency error at 486 MHz, level –14 dBm | | –10 | | +10 | | Hz | | X |
| K21 | RX GSM phase error at 876 MHz, peak, level +5 dBm | RX Demodulation | –2 | | +2 | | ° | | X |
| K21 | RX GSM phase error at 876 MHz, rms, level +5 dBm | | –0.6 | | +0.6 | | ° | | X |
| K21 | RX GSM frequency error at 876 MHz, level +5 dBm | | –10 | | +10 | | Hz | | X |
| K21 | RX GSM phase error at 915 MHz, peak, level –14 dBm | | –2 | | +2 | | ° | | X |
| K21 | RX GSM phase error at 915 MHz, rms, level –14 dBm | | –0.6 | | +0.6 | | ° | | X |
| K21 | RX GSM frequency error at 915 MHz, level –14 dBm | | –10 | | +10 | | Hz | | X |
| K22 | RX GSM phase error at 1710 MHz, peak, level +5 dBm | RX Demodulation | –2 | | +2 | | ° | | X |
| K22 | RX GSM phase error at 1710 MHz, rms, level +5 dBm | | –0.6 | | +0.6 | | ° | | X |
| K22 | RX GSM frequency error at 1710 MHz, level +5 dBm | | –10 | | +10 | | Hz | | X |
| K22 | RX GSM phase error at 1785 MHz, peak, level –14 dBm | | –2 | | +2 | | ° | | X |
| K22 | RX GSM phase error at 1785 MHz, rms, level –14 dBm | | –0.6 | | +0.6 | | ° | | X |

| | | | | | | | | | |
|---|---|---|---|---|---|---|---|---|---|
| K22 | RX GSM frequency error<br>at 1785 MHz, level –14 dBm | | –10 | | +10 | | Hz | | X |
| K23 | RX GSM phase error<br>at 1850 MHz, peak, level +5 dBm | RX<br>Demodulation | –2 | | +2 | | ° | | X |
| K23 | RX GSM phase error<br>at 1850 MHz, rms, level +5 dBm | | –0.6 | | +0.6 | | ° | | X |
| K23 | RX GSM frequency error<br>at 1850 MHz, level +5 dBm | | –10 | | +10 | | Hz | | X |
| K23 | RX GSM phase error<br>at 1910 MHz, peak, level –14 dBm | | –2 | | +2 | | ° | | X |
| K23 | RX GSM phase error<br>at 1910 MHz, rms, level –14 dBm | | –0.6 | | +0.6 | | ° | | X |
| K23 | RX GSM frequency error<br>at 1910 MHz, level –14 dBm | | –10 | | +10 | | Hz | | X |
| K24 | RX GSM phase error<br>at 824 MHz, peak, level +5 dBm | RX<br>Demodulation | –2 | | +2 | | ° | | X |
| K24 | RX GSM phase error<br>at 824 MHz, rms, level +5 dBm | | –0.6 | | +0.6 | | ° | | X |
| K24 | RX GSM frequency error<br>at 824 MHz, level +5 dBm | | –10 | | +10 | | Hz | | X |
| K24 | RX GSM phase error<br>at 849 MHz, peak, level –14 dBm | | –2 | | +2 | | | | X |
| K24 | RX GSM phase error<br>at 849 MHz, rms, level –14 dBm | | –0.6 | | +0.6 | | | | X |
| K24 | RX GSM frequency error<br>at 849 MHz, level –14 dBm | | –10 | | +10 | | Hz | | X |

# 2 Adjustment

The following chapter describes the manual adjustment of the reference sources as well as the software-controlled adjustment of individual module data following module replacement (automatic adjustment of module data).

The manual adjustment of the +5 VDC reference source which provides the highly stable DC reference voltage for the individual CMU modules as well as that of the 10 MHz reference frequency source which determines the frequency accuracy of the CMU are described. The adjustment permits to maintain and restore the data integrity of the instrument.

Manual adjustments must be performed at an ambient temperature between +23°C and +30°C after the instrument has warmed up.

After the software-controlled adjustment has been performed, the CMU is ready for use and offers full data integrity except for the level accuracy. In order to attain the level accuracy specified in the data sheet, it is necessary to record the path error data. To this end, the CMU must be tested using the test system ACS 100 (see chapter 1, *Performance Test).*

## Manual Adjustment

In the following, the measuring instruments and auxiliary means required for the manual adjustment of the CMU, the appropriate preparations of the instrument as well as the individual adjustments will be explained.

### Measuring Instruments and Auxiliary Equipment

Table 2-1 Measuring instruments and auxiliary equipment for manual adjustment of the CMU

| Item | Type of instrument | Required characteristics | Appropriate device | R & S order number | Use page |
|---|---|---|---|---|---|
| 1 | Voltmeter | DC measurement | URE3 | 350.5315.03 | |
| 2 | Spectrum analyzer with frequency counter | Frequency measurement up to 1 GHz | FSE | 1066.3010.20 (30) | |

## Preparing the Instrument

Opening the casing:

- Remove the power plug on the CMU and place the CMU onto the front handles.
- Loosen the four Phillips screws at the four rear-panel feet and take off the feet.
- Pull off the instrument tube towards the top.
- Locate the adjustment devices (see chapter 5, *drawing 1100.0008.01 D page 3).*
- After performing the manual adjustment, close the casing again in the reverse order.

***Note:***

*If only the Option OCXO REFERENCE OSC. CMU-B11/B12 is to be adjusted, it is not necessary to open the complete tube of the CMU. The adjustment can be made from outside through the ventilation holes using a small screwdriver (see chapter 5, drawing 1100.0008.01 D page 3).*

## Adjusting the + 5 VDC Reference Voltage

Preparation:

- Connect the DC voltmeter test cable to the SMB plug X221 (see chapter 5, drawing 1100.1027.01 page 1) on the motherboard.
- Switch on the CMU and allow it to warm up for approx. 5 minutes.

Adjustment:

- Use potentiometer R120 on the REFERENCE BOARD to adjust the measured value at the DC voltmeter to + 5.000 V ± 1 mV.

## Adjusting the 10 MHz Reference Frequency

Preparation:

The measurement can be performed either at connector REFOUT1 (rear of CMU) at 10 MHz or at connector RF3OUT (front) at 1 GHz using a frequency counter.

- For the measurement at connector RF3OUT set the generator to 1 GHz and 13 dBm without modulation in the RF menu.

  For the adjustment, the CMU must be set to internal reference source.

- This setting is to be selected in the sync menu of the respective application.

**Note:**

*The measurement at 1 GHz can be performed with a lower frequency counter resolution (1 Hz) in order to achieve a faster adjustment.*

### TCXO

Adjustment:

- Use potentiometer R121 on the REFERENCE BOARD to adjust the measured value at the frequency counter to

  10.000 000 0 MHz ± 0.5 Hz (at REFOUT1) or
  1.000 000 000 GHz ± 50 Hz (at RF3OUT).

***Note:***

*This adjustment is only required if none of the options CMU-B11 or B12 is installed.*

### OCXO REFERENCE OSC. CMU-B11

(if option is installed)

Adjustment:

- Use potentiometer R5 on the OCXO REFERENCE OSC. BOARD to adjust the measured value at the frequency counter to

  10.000 000 00 MHz –0.1/ +0.05 Hz (at REFOUT1) or
  1.000 000 000 GHz –10 Hz/ +5 Hz (at RF3OUT)

  (a lead of at least –2 to –5 Hz at 1 GHz is desired because of aging).

***Note:***

*The CMU must have been switched on for at least 5 minutes so that the OCXO has warmed up.*

### OCXO REFERENCE OSC. CMU-B12

(if the option is installed)

Adjustment:

- Use potentiometer R5 on the OCXO REFERENCE OSC. BOARD to adjust the measured value at the frequency counter to

  10.000 000 00 MHz –0.1/ +0.05 Hz or (at REFOUT1) or
  1.000 000 000 GHz –10 Hz/ +5 Hz (at RF3OUT)

  (a lead of at least –2 to –5 Hz at 1 GHz is desired because of aging).

***Notes:***

*The CMU must have been switched on for at least 10 minutes so that the OCXO has warmed up.*
*During the adjustment, operate the CMU in the horizontal position!*

# Automatic Adjustment of Module Data

In order to match the data stored in EEPROMs on the respective modules to the complete instrument, an automatic adjustment of module data is always necessary after replacing a module.

In addition to some standard information such as module name, serial number, hardware status and date of manufacture, these stored data items contain important pieces of information within value tables from module pre-testing, e.g. frequency responses for module error data.

This information permits to make the complete instrument ready for operation again (see also chapter 1, *Performance Test*).

In the following, the preparations and the procedure of the automatic module data adjustment will be explained.

## Preparing the adjustment

Replacement of module(s):

- ➢ Replace the faulty module(s) (see chapter 3, *module replacement).*
- ➢ Close the CMU casing (see chapter 3, *module replacement*).
- ➢ Connect the CMU to the mains and switch on.

## Performing the adjustment

Starting the version manager:

- ➢ Note the startup in the display when switching on the CMU for the first time.
- ➢ When a beep can be heard three times, press the *MENU SELECT* key.

  The version manager is started (see also chapter 4, *Firmware Update*). The display includes the menu item *FIRMWARE UPDATE AFTER BOARD CHANGE*.

Procedure:

- ➢ Press the softkey to the left of the above mentioned menu item.

The automatic adjustment of module data is started under software control.

It may take a few minutes to additionally perform firmware updates for microprocessors and programmable devices.

After the adjustment has been terminated, press the softkey to the left of the EXIT menu item, the operating software starts and the CMU is ready for use and can be operated in the usual way.

# 3 Repair

This chapter describes the design of the CMU, simple measures for repair and troubleshooting and, in particular, the replacement of modules. For troubleshooting and diagnosis, a maintenance menu is available, which permits to poll diagnostic voltages of the modules and indicate limit violations.

The installation of options and software update are explained in chapter 4 of this service manual.

## Instrument Design and Function Description

**Instrument design**

A detailed overview of the CMU design will be presented with the block diagram below and the exploded views (see chapter 5).

The following function description of the instrument refers to the block diagram.

**Cabinet design**

The casing of the CMU is a robust, gray-blue Rohde & Schwarz standard casing according to BW 2000.

It consists of a frame with integrated rear panel and a labeling panel at the front of the frame. The frame is covered by a one-piece tube and screwed with four rear-panel feet. Two front handles are screwed to the frame as standard, a further handle on the left side can be provided as accessory.

The dimensions are as follows:

Overall: W*H*L 465 mm * 193 mm * 517 mm

Rackmount: W*H 1/1 of 19 inch * 4 units

***Note:*** *The terms "left" and "right" in the manual always refer to the front view of the instrument.*

## Block diagram

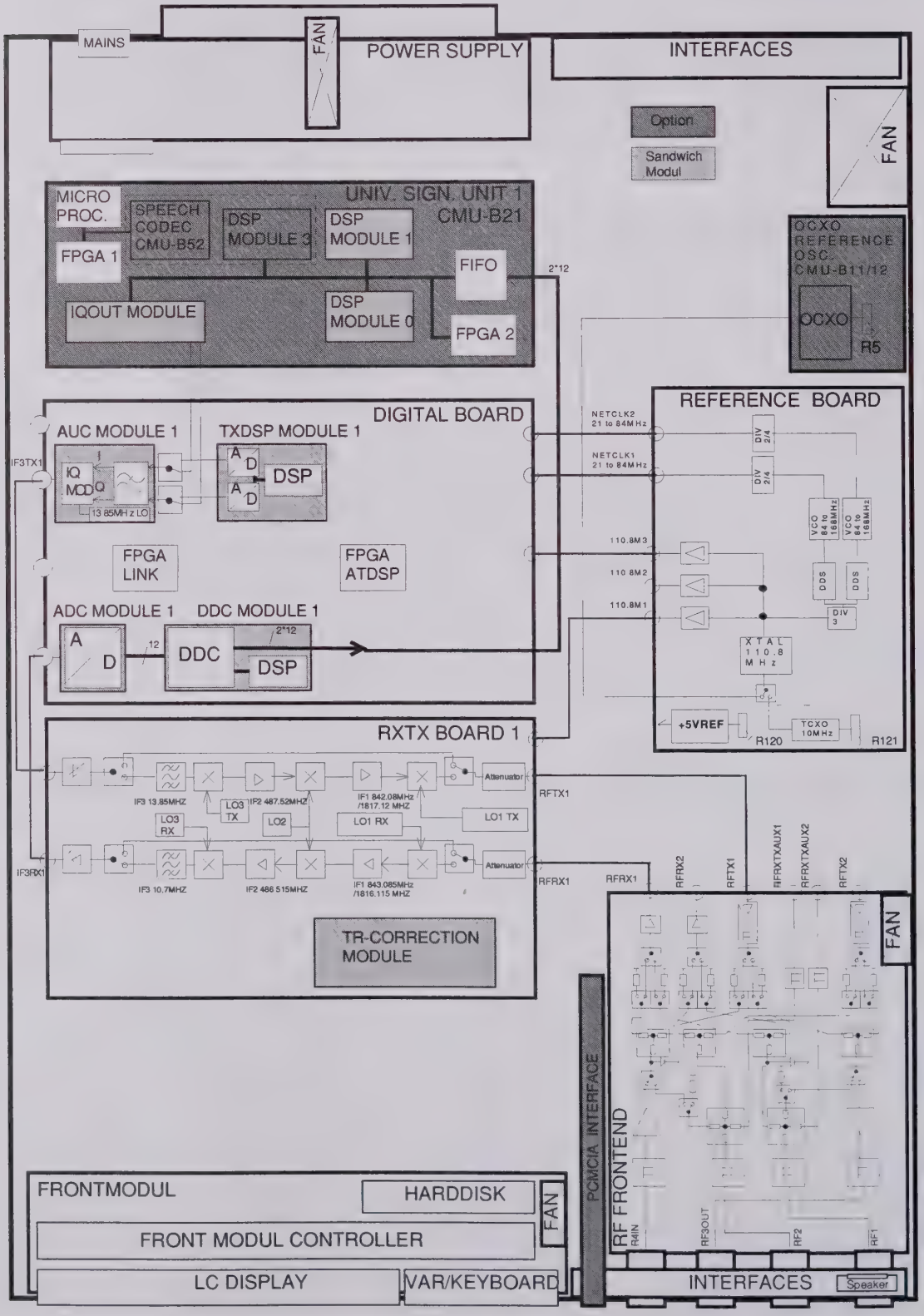

## Instrument Frame

The instrument frame consists of front frame, module support, partition, cage and air duct. The module support is screwed to the front frame. It incorporates the partition, the cage and the air duct and provides all mechanical connectors and slots for modules. The MOTHERBOARD for electrical connection of the modules as well as the big fan for cooling the modules are screwed to the instrument frame.

## Rear of Instrument Frame

At the rear of the CMU instrument frame, the power supply with integrated power plug and switch as well as other important electrical interfaces are fitted (see chapter 1, *operating manual*).
The power supply unit can be easily replaced.
A further rear panel that is screwed to the frame serves as support for further electrical interfaces and optional extensions.

## Front of Instrument Frame

The front of the instrument frame incorporates the FRONT MODULE, the most important electrical interfaces as well as the optional FLOPPY DISK or PCMCIA INTERFACE drive.

**FRONT MODULE**

The components of the FRONT MODULE that are directly arranged at the front of the CMU are the LCD and the operating keys with the spinwheel.
The operating keys consist of a membrane and a mat inserted into the keyboard frame of the FRONT MODULE. The operating keys are colored differently to highlight their function and partly labeled.
This module can be conveniently replaced as a unit.

The beeper with sound outlet on the FRONT MODULE is used for acoustic prompts and error warnings.

**Electrical interfaces**

The electrical interfaces are mounted on an extra mounting plate. The RF interfaces are components of the RF FRONTEND.

**Loudspeaker**

A loudspeaker with sound outlets at the labeling panel allows for acoustic hints for AF signals. It is controlled via the option CMU-B41 AUDIO-GEN. + ANA.

## Cooling the Instrument

**Axial fan in the casing**

The right side panel contains a temperature-controlled axial fan (120 mm x 120 mm x 38 mm), which sucks in cold ambient air at the right tube of the casing and blows it through the modules via a ventilation duct and further ventilation slots. The amount of air is controlled via the width of the slots depending on the power dissipation of the module.
The modules are cooled by the air flow, and the heated air is then blown out at the left side panel.

**Axial fan of power supply**

In addition, the power supply of the CMU is equipped with its own temperature-controlled axial fan (80 mm x 80 mm x 25 mm) with a separate air circulation. The fan sucks in cold air on the left rear side of the power supply casing and blows out the heat produced in the power supply on the right rear side of the power supply casing.

**Axial fan of FRONT MODULE**

For cooling the controller board, the FRONT MODULE is provided with its own axial fan (40 mm x 40 mm x 10 mm), which sucks in cold ambient air on the left side of the instrument and blows it out at the right side panel.

**Axial fan of RF FRONTEND**

The RF FRONTEND which can process powers up to 50 W is equipped with an aluminum casing with its own air duct, cooling fins and a temperature-controlled axial fan (40 mm x 40 mm x 20 mm), which dissipates the heat by sucking in cold air directly on the right rear side of the instrument and blowing in out again on the right front side of the instrument.

The cooling concept makes sure that all components are optimally cooled so that the complete instrument achieves a high MTBF.

# FRONT MODULE

The FRONT MODULE consists of an aluminum case panel and a mounting plate which accommodates the LCD, the keyboard mat with the membrane and the spinwheel.
The case panel incorporates the FRONT MODULE CONTROLLER, the fan and the hard disk.

**LCD**

The color LCD provides a visible output of any information, measurements etc. to the user.
The resolution of the LCD is 640 * 480 pixels (VGA).
The display incorporates two cold cathode tubes for the illumination. The high voltage required for this purpose is generated in an extra DC/AC converter mounted next to the display on the mounting plate and connected both to the display and the controller board via a cable.
The liquid crystal display is controlled via a ribbon cable that is plugged in on the controller board.

**Operating keys**

The operating keys consisting of a keyboard mat and a membrane release a contact when the rubber key is pressed. Two LEDs for the STANDBY/ON key (orange for STANDBY/green for ON) are also accommodated on this membrane.
The rubber keys enable the user to call up all CMU functions.

The key evaluation and LED control are effected via a film cable connector on the controller board. Like the control of the two LEDs, it is controlled in a special microprocessor on the controller board by means of a matrix technique. This microprocessor permits to store the status of the STANDBY/ON key when switching off using the power switch.

**Spinwheel**

The spinwheel consists of a flexible magnetic ring with individual magnets for the lock-in positions. With each turn of the spinwheel, electrical pulses are released from the LEDs and the optical position detectors and sent via a ribbon cable to the microprocessor on the FRONT MODULE CONTROLLER for evaluation.
The spinwheel serves the user as a further means of data entry and operation.

**FRONT MODULE CONTROLLER**

The FRONT MODULE CONTROLLER contains all the necessary components on a board such as processor, memory chips, I/O devices (ISA bus), lithium battery, IEC-bus controller (IEEE), two serial interfaces (COM1/2), a parallel interface (LPT), LCD graphics controller, external VGA monitor graphics interface (monitor) and an external keyboard connection (keyboard PS/2).
In addition, a floppy controller for an external floppy disk drive and an IDE hard disk controller are integrated on the controller board.

**Hard disk**

The hard disk is screwed to the printed circuit board above the FRONT MODULE CONTROLLER (MODEL 04) or is screwed to the rear of the aluminum case panel (MODEL 12) and connected to the printed circuit board via a ribbon cable.

**Fan**

A small axial fan in the case panel produces an air flow through the FRONT MODULE CONTROLLER, cooling it with cold ambient air.

**Connection**

The FRONT MODULE is directly plugged to the MOTHERBOARD via two 96-pin FUTURE BUS connectors (MODEL 04) and one additional 110-pin PCI Bus connector (MODEL 12).

## POWER SUPPLY

The POWER SUPPLY of the CMU consists of a two-part aluminum casing with three boards arranged in a so-called sandwich technique (U-shape). In addition to cooling, the axial fan already mentioned above (see cooling of instrument) is also used to support the three boards.

**STANDBY/ON signal**

The control signal STANDBY/ON controlled by the FRONT MODULE CONTROLLER (depending on the operating key STANDBY/ON on the front of the instrument frame) activates the power supply.

**Power Factor Correction (PFC) and Standby circuit**

The POWER SUPPLY is a primary clocked switching power supply with Power Factor Correction (PFC) and Standby circuit (+12 V Standby).
On the secondary side, it generates all DC voltages (+3.3 V; +5.2 V; +6 V; +8 V; +12 V; +12 VFAN; +12 V Standby; +28 V; -12 V) for the CMU.
The secondary voltages are open-circuit-proof and short-circuit-proof with respect to ground and each other.

**POWERGOOD - Signal**

When switching on and off (defined reset), the POWER SUPPLY generates a POWERGOOD signal for control of the FRONT MODULE CONTROLLER.

**Overtemperature protection**

An overtemperature protective circuit is additionally installed to prevent overheating. This status is taken to the FRONT MODULE CONTROLLER via a status signal (OT).

**AC voltage supply**

A 3-pin connector with integrated 2-pin mains switch for connection with the AC-Supply is installed on the rear panel of the POWER SUPPLY. From there, the AC supply voltage is internally taken to the first board via two cables.
Two fuses are also fitted there as a means of fire protection.

***Note:*** *These fuses are not accessible to the user from outside and are only blown in the case of a serious fault of the power supply (servicing required!).*

**Primary side**

The following circuit parts follow on the first board: EMI filter and power rectifier. The rectified AC supply voltage is taken via a cable to the second board of the Power Factor Correction (PFC). This circuit converts the rectified AC supply voltage up to a constant voltage of 380 VDC. Then this voltage is taken to a step down converter which provides a constant voltage of 280 VDC for the subsequent resonance step down converter, which chops it with approx. 35 kHz.
An additional connecting cable is used to feed the big transformer located on the first board. It is provided with taps for the various secondary voltages, and the following rectifiers constitute the transition to the DC secondary side.

**Secondary side**

The +12 V-, -12 V- and +6 V- secondary voltages are provided with analog regulators in order to ensure a high spurious suppression.
The +3.3 V- and +5.2 V- secondary voltages have their own stepdown converters to achieve small power dissipations.
The +28 V- voltage requires a stepup converter in order to generate the high voltage with a high accuracy.
At the +12 VFAN, a constant current source is used for efficient suppression of fan interference.
The secondary voltages are then filtered and subsequently taken to the output connector.

**Standby converter and control unit**

The third printed circuit board which serves as a connection between the first and second board accommodates the control and monitoring circuit parts. Besides, it includes the standby converter, which generates a +12-V standby voltage from the 380 VDC voltage of the PFC circuit.

**Connection**

The POWER SUPPLY is directly connected to the MOTHERBOARD via a 96-pin FUTURE-bus connector on the MOTHERBOARD and screwed to the integrated rear panel of the CMU with its casing.

## MOTHERBOARD

The MOTHERBOARD consists of five individual printed circuit boards: MOTHERBOARD1, MOTHERBOARD2, FRONTPANEL BOARD, REARPANEL BOARD1 and REARPANEL BOARD2.

**MOTHERBOARD1**

The MOTHERBOARD1 is the central motherboard and serves as connection between most of the modules. It supplies the modules both with voltages and control, status and bus signals in various layers (12-layer multilayer).
The MOTHERBOARD1 accommodates various ISA bus driver devices for the PCMCIA INTERFACE control as well as protective circuits. These protective circuits consist of diodes and polyswitches (current-dependent, self-opening and closing fuses) and protect against external overvoltages of the interface signals.
Nine LEDs indicate the status of the supply voltages and help with troubleshooting.
On MOTHERBOARD1, a circuit for temperature-dependent instrument fan control is also implemented:
The individual module temperatures are polled by the FRONT MODULE CONTROLLER of the CMU. This information is passed on via the DIGITAL BOARD to the fan control with the aid of a control signal. The instrument fan is controlled such that an optimum module temperature is achieved on the one hand and as little noise as possible is emitted by the fan on the other hand.

**MOTHERBOARD2**

The MOTHERBOARD2 serves for supply and connection of the modules located higher at the side, the REFERENCE BOARD and a further option.
For connection with MOTHERBOARD1 two 50-pin ribbon cables are used.

**FRONTPANEL BOARD**

The FRONTPANEL BOARD is located at the front of the instrument frame and accommodates the external interfaces DATA1, DATA2, AUX3 and SPEECH. Besides, the six LEDs for the display of the active RF inputs/outputs are located there.
For connection with MOTHERBOARD1 a 50-pin ribbon cable is used.

**REARPANEL BOARD1**

The REARPANEL BOARD1 is screwed to the integrated rear panel of the CMU below the POWER SUPPLY and accommodates the external interfaces IEEE, LPT, COM1, COM2, monitor and keyboard.
For connection with MOTHERBOARD1 two 34-pin ribbon cables are used.

**REARPANEL BOARD2**

The REARPANEL BOARD2 is mounted to the right of the integrated and unscrewable rear panel plate and accommodates the interfaces SERVICE, AUX, AUX4 as well as further spare interfaces. For connection with MOTHERBOARD1 two 34-pin ribbon cables are used.

## REFERENCE BOARD

The REFERENCE BOARD provides all required clock signals (NETCLK1/2) and reference frequencies (110.8 MHz) as well as the +5 VDC reference voltage for the CMU. The REFERENCE BOARD is a plug-in module in HVC design.

**Design**

At the top of the module, nine MMCX connectors are attached, which serve as inputs or outputs for various clock signals and are routed to the respective modules or the integrated rear panel with appropriate coax cables.
Two holes in the HVC panel at the top are used for adjusting the +5 VDC reference voltage and the 10 MHz TCXO reference frequency.

**Connection**

The plug-in module REFERENCE BOARD is inserted in the CMU on the right side on MOTHERBOARD2 using a 48-pin FUTURE-bus connector.

**REFERENCE frequency generation**

All frequencies provided by the CMU are derived from internal high-precision 10-MHz reference elements (TCXO or optional OCXO) or from externally applied frequencies.
A 110.8-MHz crystal oscillator is coupled in locked phase relation in a PLL loop with the selected reference.
The reference element TCXO is used as standard on the reference board. If the option OCXO (CMU-B11 or -B12) is installed in the CMU, it is automatically used as reference element and the standard TCXO is switched off.
It is additionally possible to switch over to external synchronization (see operating manual, *4.34 Connection Control-Synch.*) and use the signal fed in at the BNC connector REFIN at the rear of the CMU as reference signal.
At the BNC connector REFOUT1 at the rear of the CMU, either the internal 10-MHz reference frequency or the signal applied at REFIN can be buffered and tapped depending on the selected reference element.
The 110.8-MHz sinewave signal of the crystal oscillator passes a harmonics filter, is buffered and provided at three MMXC connectors, serving as reference frequency for the RXTX BOARD1/2 and the DIGITAL BOARD.
At a further MMCX connector, the TTL signal RESFREQ is available with 27.7 MHz (110.8 MHz / 4) for the option CMU-B41 AUDIO-GEN. + ANA. as clock signal.

**Netclock generation**

The REFERENCE BOARD is also used for netclock generation, providing adjustable TTL clock frequencies from 21 MHz to 84 MHz with a very fine frequency resolution of 0.1 Hz. This function is provided twice so that two independent netclock frequencies are available at the same time.

The signal generated by the 110.8-MHz crystal oscillator is divided by three and applied to a DDS circuit (Direct Digital Synthesis). The DDS circuit is used as a fine-adjustable frequency divider and generates a divided signal from 9 MHz to 12 MHz.
This signal is then used in a further PLL as nominal value for the phase detector in order to tune a VCO (Voltage Controlled Oscillator) with a

tuning range of 84 MHz to 168 MHz in locked phase relation.
A fractional divider used in the feedback of the PLL provides the actual value for the phase detector.

The output signal of the VCO is divided by two or four, buffered and provided at the MMCX connector NETCLK 1 or NETCLK 2 and serves as network-specific TTL clock for the DIGITAL BOARD.

## Option OCXO REFERENCE OSC. CMU-B11 or B12

This option consists of a printed circuit board with the reference element OCXO (oven-controlled crystal oscillator), the control circuit and a potentiometer for adjusting the OCXO.

**Installation**

The option OCXO REFERENCE OSC. is installed on the right side below the instrument fan such that the potentiometer is easily accessible from outside without the need for opening the CMU tube.

**Connection**

The option OCXO is directly inserted via a 10-pin connector on the MOTHERBOARD and screwed to the module support by means of three screws.

The options CMU-B11 and B12 are basically of the same design. The two options only differ from each other in the technical data of the OCXO such as aging and frequency drift.

## RF FRONTEND

**Design**

The printed circuit board of the RF FRONTEND is installed in a silver-coated aluminum casing which is screwed to the instrument frame. The RF FRONTEND is fitted at the right front of the CMU such that the four RF N-type connectors which are directly connected to the FRONTEND board are accessible on the front of the instrument frame of the CMU. This is absolutely necessary to ensure a good VSWR (Voltage Standing Wave Ratio).

**Cooling system**

The aluminum casing in which the RF FRONTEND is installed is equipped with cooling fins in a special cooling duct and an extra temperature-controlled fan for heat dissipation if high RX power is fed in.

**Control and supply**

Control and supply of the RF FRONTEND are effected from MOTHERBOARD1 via a 34-pin ribbon cable.

**RF connectors**

For the internal RF connection to the RXTX BOARD1 (RFRX1, RFTX1) two SMA screw connections and coaxial solid-jacket cables are used. Thus a high-quality RF connection is ensured.
Besides, two further internal RF connections (RFRX2, RFTX2) to the optional RXTX BOARD2 are available.

Two bidirectional monitor inputs/outputs (RFRXTXAUX1/2) at the RF FRONTEND permit to connect further RF devices via optional cables leading to the integrated rear panel of the CMU.
As external RF interface, the RF FRONTEND is equipped with the four N-type connectors RF1, RF2, RF3OUT, RF4IN, which permit to

perform all the RF measurements of the CMU.
RF1 and RF2 are bidirectional inputs/outputs depending on the setting and measurement application.
RF3OUT is a unidirectional output.
RF4IN is a unidirectional input.

**Optical indication**

For optical indication of the selected N-connectors and input and/or output functions, yellow LEDs located above the N-connectors are switched on.

**Functions**

On the transmitter side (TX), the RF FRONTEND serves the purpose of distributing internal RF signals to the outside to the various N-connectors (RF1, RF2, RF3OUT) and attenuate or amplify them according to the selected output and level.
On the receiver side (RX), its purpose is to internally distribute external RF signals from the different N-connectors (RF1, RF2, RF3OUT) and attenuate or amplify them according to the selected input and the applied level.
Since high levels and powers up to 50 W can be fed in on the receiver side (RX), the RF FRONTEND is equipped with power attenuators and the cooling system with the fan described above, which is controlled by the temperature at the power attenuators.
The RF FRONTEND additionally features two broadband power measuring diodes, which permit to measure the power applied at the N-connectors RF1, RF2, RF4IN even in pulsed operation.

## RXTX BOARD1

The RXTX BOARD1 constitutes the central RF board which contains all circuit parts for conversion from RF to IF both for the transmitter (TX) and receiver (RX).

**Design**

The RXTX BOARD1 is designed as plug-in module with a silver-coated two-shell aluminum casing fixed with several screws.

**Cooling system**

This casing is equipped with cooling fins at the front and rear which are provided with a cover sheet each so that two special cooling ducts are produced. These cooling ducts are evenly cooled by the air flow of the instrument fan irrespective of neighboring modules.
This efficient cooling is required since a very high degree of integration and a large portion of fast RF components are implemented on this board.

**Control and supply**

Control and voltage supply of the RXTX BOARD1 are effected via a 96-pin FUTURE-bus connector from MOTHERBOARD1.

**Complete function**

For conversion from RF to IF, the transmitter side (TX) is implemented on one side of the multilayer PC board and the receiver side (RX) on the other side on the RXTX BOARD1. This strict separation of the functions permits to achieve high decouplings as they can usually only be achieved with two separate modules.

**Transmitter functions**

On the transmitter side (TX), an IF signal with 13.85 MHz is applied at the MMCX connector IF3TX1 (top of module) of the RXTX BOARD1, which is provided by the DIGITAL BOARD.
On the RXTX BOARD1, this signal is taken via various amplifier stages, attenuator pads and filters and finally set to the desired RF

frequency by means of triple signal conversion (IF3, IF2, IF1). This is necessary to obtain a high image-frequency rejection.

At the TX output, a switchable attenuator with fine stepping and large attenuation range is used to set the RF signal amplitude according to the level selected.

The RF signal is finally taken to the RF FRONTEND at the SMA connector RFTX1 (bottom of module).

The transmitter side is provided with an extra LO1TX (Local Oscillator) with large tuning range and very fine frequency resolution used for setting the desired transmitter frequency, an LO2 fixed-frequency oscillator shared with the receiver side and an extra LO3TX with small tuning range. All LOs are synchronized by the MMCX connector 110.8MHz at the bottom of the module with the reference frequency from the REFERENCE BOARD.
Besides, an MMCX connector at the top of the RXTX BOARD1 is designed as input with the second transmitter IF (RESIF2TX) which is activated via software switches.

**Receiver functions**

On the receiver side (RX), the RF signal is fed in at the SMA connector RFRX1 (bottom of module) of the RXTX BOARD1 which is provided by the RF FRONTEND.
On the RXTX BOARD1, this signal is taken via a switchable attenuator with fine stepping and large attenuation range in order to match the level according to the level applied.
Subsequently, this signal is converted to an IF frequency of 10.7 MHz by means of triple signal conversion (IF1, IF2, IF3) and several filter and amplifier stages and provided at the MMCX connector IF3RX1 (top of module) for the DIGITAL BOARD.
This procedure is necessary to achieve a high image-frequency rejection and a high dynamic range with a simultaneously high intermodulation suppression.
For the receiver side, an extra LO1RX (local oscillator) is provided with a large tuning range and a very fine frequency resolution used for setting the receive frequency, an LO2 fixed-frequency oscillator shared with the transmitter and an extra LO3RX with a very small tuning range.
All LOs are synchronized by the MMCX connector 110.8 MHz at the bottom of the module with the reference frequency from the REFERENCE BOARD.
A further MMCX connector RESIF3RX (top of module) provides a buffered RX IF signal of 10.7 MHz which is taken to the rear of the CMU via a coax cable. This signal output can be activated via a software switch.
Besides, an MMCX connector at the top of the RXTX BOARD1 is designed as output with the second receiver IF (RESIF2RX) which can be activated via software switches.

**Correction processor**

The RXTX BOARD1 contains an extra correction processor with large flash PROM.
It controls all the static and dynamic settings on the RXTX BOARD1 and, as a special feature, also the attenuator pads and amplifiers of the RX and TX attenuator on the RF FRONTEND.
Besides, the correction processor permits to read out the individual module error data from the EEPROMS of the respective modules in a so-called correction procedure (automatic module data adjustment) and calculate the deviations for all possible signal paths. These

deviations are stored as correction values in the flash PROM. The correction processor then sets the desired level settings, corrected by the correction values, in the flash PROM so that frequency, linearity and temperature responses of the modules are compensated for.
This ensures the excellent level accuracy of the CMU which is essential for most measurements.

**Extension**

The CMU 200 can be extended by a RXTX BOARD2 and thus provide a second complete transmit and receive channel.

## DIGITAL BOARD

The DIGITAL BOARD constitutes the central control and measurement board which contains all circuit parts for conversion and further processing of the analog IF (receiver side) into digital I/Q values.
On the transmitter side, analog as well as digital I/Q values are modulated upon the carrier and provided as analog IF.

**Design**

The DIGITAL BOARD is designed as HVC 200 plug-in module. The HVC 200 cabinet is equipped with a screwed-on cover both at the front and rear to ensure optimum electrical shielding of the module.

**Cooling system**

The casing is provided with ventilation holes on the right and left in order to produce a large cooling flow through the module by means of the instrument fan.
This efficient cooling is necessary, since a great number of highly integrated fast digital devices is used on the module and up to eight sandwich modules can additionally be fitted so that the board is densely packed.

**Control and supply**

The control, bus lines and voltage supply of the DIGITAL BOARD are effected via four 96-pin and one 48-pin FUTURE-bus connectors from MOTHERBOARD1.

**Function**

As standard, the four sandwich boards ADC Module1, DDC Module1, TXDSP Module1 and AUC Module1 are fitted.
On the DIGITAL BOARD, all necessary clocks are generated and provided from the netclocks 1 and 2 in a clock conditioning and distribution circuit. These clocks are required for sampling, filtering and down converting the digital IF internally and for the UNIVERSAL SIGNALLING UNIT MODULE.
Besides, two programmable logic devices (FPGA) are used on the DIGITAL BOARD, which provide address decoding, interrupt control and host interfaces between ISA bus and internal circuit parts (DDC/TXDSP) as well as the control of the RF FRONTEND (via FEI$^2$C-Bus), the REFERENCE BOARD and AUDIO BOARD (via buffered ISA bus) and the RXTX BOARD1 (via serial bus). Further serial interfaces lead from the programmable logic devices to the UNIVERSAL SIGNALLING UNIT1 and vice versa.
An AD converter on the DIGITAL BOARD is used for polling the diagnostic voltages of the CMU modules, which can indicate module states and errors.

**ADC MODULE1**

The sandwich ADC MODULE1 is connected to the DIGITAL BOARD via a multipoint connector. In addition, it is screwed to a solid ground block to obtain a good ground connection.
The ADC MODULE1 receives the analog IF (10.7 MHz) from the RXTX

BOARD1 directly via a MMCX connector (IF3RX1) and converts it into a 12-bit data stream by means of a fast AD converter.

**DDC MODULE1**

The sandwich DDC MODULE1 is directly plugged onto the DIGITAL BOARD via three multipoint connectors and processes the digital data stream of the receiver. In a special ASIC chip, the I/Q shaping, the matching of the data rate and the respective filtering (bandwidth shaping) of the digital data stream are produced. Then follows a DSP (RX DSP) with further evaluation of the digital I/Q data for measurement purposes. Besides, the digital I/Q data are passed on via the MOTHERBOARD1 to the LINKHANDLER MODULE for evaluation.

**TXDSP MODULE1**

The sandwich TXDSP MODULE1 is directly plugged onto the DIGITAL BOARD via two multipoint connectors. It contains the DSP on the transmitter side (TXDSP), which generates I/Q data according to the application and provides them to the AUC MODULE1 via two 12-bit D/A converters and several selection switches located on the DIGITAL BOARD.

**AUC MODULE1**

The sandwich AUC MODULE1 is directly plugged onto the DIGITAL BOARD via a multipoint connector and serves the purpose of filtering the analog I/Q data from the TXDSP MODULE1 or the LINKHANDLER MODULE depending on the position of the selection switches on the DIGITAL BOARD according to the application (bandwidth shaping) and converting it to the transmit IF (13.85 MHz) by means of an I/Q modulator. Subsequently, the transmit IF is routed via the MMCX connector (IF3TX1) on the DIGITAL BOARD to the RXTX BOARD1.

**Extension**

The DIGITAL BOARD can be extended by a further complete receive and transmit channel consisting of ADC MODULE2, DDC MODULE2, TXDSP MODULE2 and AUC MODULE2.

## Option UNIVERSAL SIGNALLING UNIT CMU-B21

The UNIV. SIGN. UNIT MODULE is the control and measurement module which contains all circuit parts for signaling and measuring network-specific parameters.

To this end, the digital I/Q data from the DIGITAL BOARD are used on the receiver side (RX) in order to calculate test parameters.

On the transmitter side, analog network-specific I/Q data are generated and provided to the AUC MODULE1 on the DIGITAL BOARD.

**Design**

The UNIV. SIGN. UNIT MODULE is designed as plug-in module with two aluminum shell covers. It is equipped with a screwed-on aluminum cover both at the front and rear to allow for optimal electrical shielding of the module.

**Cooling system**

The casing is provided with ventilation holes on the right and left in order to produce a large cooling flow through the module by means of the instrument fan.
This efficient cooling is necessary, since a great number of highly integrated fast digital devices is used on the module and up to seven sandwich modules can additionally be fitted so that the module is densely packed.

**Control and supply**

The control, bus lines and voltage supply of the UNIV. SIGN. UNIT MODULE are connected via two 96-pin VG multipoint connectors from MOTHERBOARD1. Further interfaces for testing and debugging are provided on the top of the module.

**Function**

As standard, the UNIV. SIGN. UNIT MODULE contains the three sandwich boards DSP MODULE0, DSP MODULE1 and IQOUT MODULE.
Besides, if a very high computing power is required, two further DSP MODULES (DSP MODULE2, DSP MODULE3) and the SHARED MEMORY can be fitted.
Furthermore, a slot for the Option CMU-B52 SPEECH CODEC is provided. This option includes DSP MODULE3.
A microprocessor with peripheral equipment and two programmable logic devices (FPGA 'XILINX1' and 'XILINX2') on the UNIV. SIGN. UNIT control all the processes on the module.
An RS232 interface is available for debugging, data input and output.
Besides, an ISA bus interface is installed for control and data communication with the FRONT MODULE CONTROLLER.

**DSP MODULE**

The two sandwich DSP MODULES (DSP MODULE0 and DSP MODULE1) are directly inserted on the UNIV. SIGN. UNIT via four multipoint connectors. Via a FIFO device, they receive the digital I/Q data from the DIGITAL BOARD for evaluation. The signal can then be demodulated by the DSP MODULES and the demodulated data can be passed on the protocol engine running on the MC or a DSP MODULE. The DSP MODULES can also perform some measurements and the results are passed on via the ISA bus interface to the FRONT MODULE CONTROLLER.
Likewise, the DSPs cause further actions on the transmitter side (TX), e.g. change transmit frequency-settings via the FPGA 'XILINX2' and output analog I/Q data via the IQOUT MODULE.

**IQOUT MODULE**

The sandwich IQOUT MODULE is directly inserted on the UNIV. SIGN. UNIT via three multipoint connectors and installed in an extra shielding chamber, since it performs the digital-to-analog conversion of the I/Q data.

**Option SPEECH CODEC CMU-B52**

The Option SPEECH CODEC CMU-B52 (including DSP MODULE3) is also designed as sandwich module and is directly plugged onto the UNIV. SIGN. UNIT via three multipoint connectors. This option permits to read in and output analog speech signals (handsetin/out lines) via A/D and D/A converters.

## Option AUDIO-GEN. + ANA. CMU-B41

The Option AUDIO-GEN. + ANA. constitutes the central AF-board which contains all circuit parts for generation of AF output and analysis of AF input signals. The Option AUDIO-GEN. + ANA. is a plug-in module in HVC design.

**Design**

At the top of the module, eight MMCX connectors are attached, which serve as inputs or outputs for AF and clock signals and are routed to the respective modules or the integrated front panel with appropriate coax cables. There is also a coax cable to the loudspeaker on the front panel.

**Connection**

The plug-in module AUDIO-GEN. + ANA. is inserted in the CMU on the right side on MOTHERBOARD2 using a 96-pin FUTURE-bus connector.

**Function**

The Option AUDIO-GEN. + ANA. contains one DSP MODULE, a clock generation circuit, an analog input section and an analog output section Further there is a power amplifier for the loudspeaker on this board
The DSP MODULE is a sandwich module, which controls the signal path, level and frequency of the AF output generator and also the signal path, attenuation and analysis of the AF input analyzer.
The DSP MODULE is connected via an ISA-Bus Interface to the FRONTMODULE CONTROLLER of the CMU.
The clock generation circuit gets from the REFERENCE BOARD a 27.7MHz signal over a coax cable and a MMCX connector. This signal feeds the DSP MODULE and is converted in a PLL circuit to 24.576 MHz.
Over a divider by 2 to. This clock signal divided by 2 (12.288MHz) is used for the A/D and D/A Converter IC and the serial links.

**Analog Input Section**

Over the BNC connectors AFIN and AUX1 at the front of the CMU and the coax cables the AF signal comes to the analog input section, which provides two independent input channels.
These two Input channels could be used as one balanced or two unbalanced channels. Over an input attenuator and an various gain amplifier per channel the AF signal comes to the A/D Converter, which sends over a serial link connection the digital values to the DSP MODULE.

**Analog Output Section**

For the AF-Generator the DSP MODULE sends the digital values over a serial link connection to the D/A Converter of the analog output section.
The analog output section provides two independent output channels, which could be used as one balanced or two unbalanced channels.
Over a various gain amplifier and a switchable output attenuator the AF signal comes to the MMCX connectors, which are connected via coax cables to the BNC connectors AFOUT and AUX2 at the front of the CMU.

## Option CDMA (IS95) Signalling Unit CMU-B81

The CDMA (IS95) Signalling Unit is a module of the CMU200 providing signalling and measuring support for the CDMA IS-95 cellular phone network.

With the use of analog and digital hardware and firmware, this module uses the down converter and a signal generator in the CMU200 to establish a link with a CDMA mobile station.

**Design**

The CDMA (IS95) Signalling Unit is a plug-in module with a complete aluminum shell providing optimal electrical shielding of the module.

**Cooling system**

Ventilation holes on the right and left of the shell produces a large cooling flow through the module by means of the instrument fan.

**Control and supply**

The MOTHERBOARD 1 provides bus lines, the voltage supply, and controls the CDMA (IS95) Signalling Unit via two 96-pin connectors and one 48-pin connector. Further interfaces for testing and debugging are provided on the top of the module.

**Function**

The CDMA (IS95) Signalling Unit contains the hardware for signal demodulation and signal generation of a CDMA system. See Figure 3-1 for a simplified block diagram.

A micro processor with peripheral equipment and three programmable logic devices (Xilinx 1, 2, and 3) on the board control all the processes on the module.

An RS232 interface is available for debugging and data input and output.

An AT-bus interface is used for control and data communication with the front module computer.

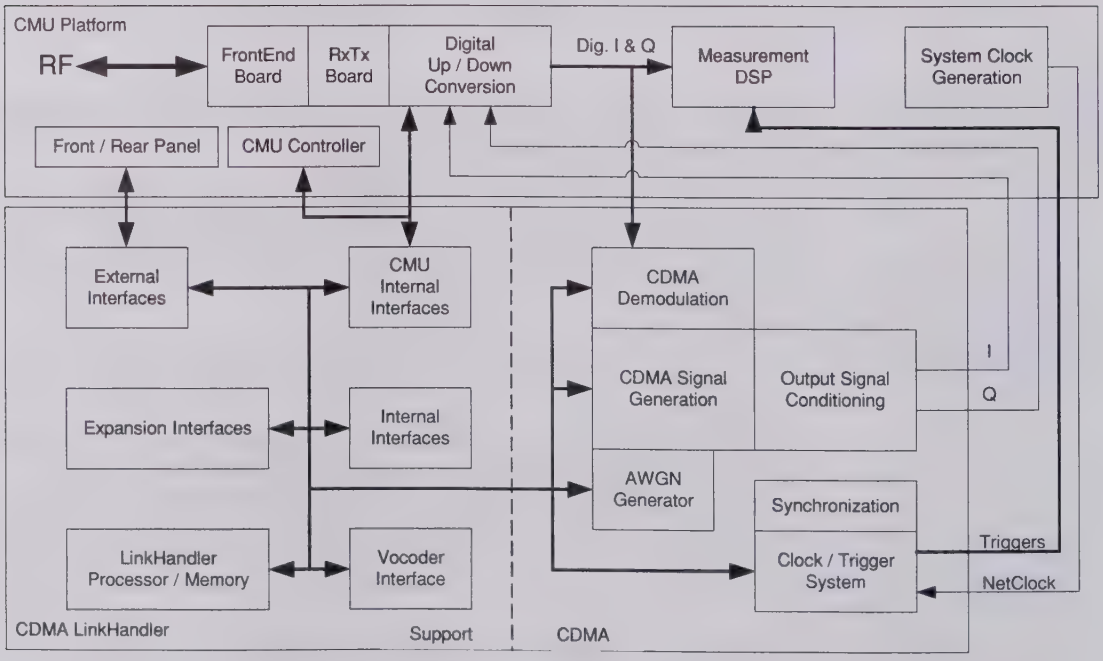


Figure 3-1: CDMA (IS95) Signalling Unit block diagram

# MODULE Replacement

**Caution!**

*Disconnect the instrument from the mains before opening the casing. Please note the safety instructions at the beginning of this manual.*

*When mounting the tube take care not to damage or pull off cables.*

## Replacing the FRONT MODULE

(see chapter 5, *spare part list, Current No. 270/275, and explosion drawing 1100.0008.01 D sheet 2*)

For replacement proceed as follows:

**Opening the instrument and removing the FRONT MODULE**

- Switch off the instrument, pull the mains plug and unscrew the rear-panel feet.
- Place the instrument onto the front carrying handles, push the tube upwards and take off.
- Unscrew the four screws of the front handles at the instrument frame on both sides and take off the front handles.
- Unscrew a countersunk screw (if present) at the front on the labeling panel next to the spinwheel and pull off the labeling panel towards the front.
- Unscrew two countersunk screws in the front frame at the top and at the bottom as well as two countersunk screws at the front above the AUX1/2 BNC connectors.
- Unscrew a combi screw at the top of the module support for support of the Option FLOPPY DISK DRIVE CMU–U61 or PCMCIA INTERFACE.
- After unscrewing the two countersunk screws at the top left instrument frame slightly lift the cover at the top of the instrument, slightly shift towards the right and lift off.
- Slightly push the FRONT MODULE from the rear to the front using little pressure.

  ***Note:*** *Note the connecting cables for the Option FLOPPY DISK DRIVE CMU–U61 or PCMCIA INTERFACE that are still connected to the MOTHERBOARD1.*
- After sliding out the FRONT MODULE disconnect the respective connecting cable for the option from the MOTHERBOARD1 as follows:
  - Option FLOPPY DISK DRIVE CMU–U61: The connecting cable is a film cable.
    - Lift the locking bracket of the connector on the MOTHERBOARD and remove the film cable.
  - PCMCIA INTERFACE: The connecting cable consists of three ribbon cables.
    - Disconnect the three ribbon cables from the MOTHERBOARD1 connector.
- Take the FRONT MODULE completely out of the CMU.
- Unscrew the two countersunk screws at the cover of the Option FLOPPY DISK DRIVE CMU–U61 or PCMCIA INTERFACE and carefully pull the option towards the front out of the FRONT MODULE.

**Installing the new FRONT MODULE and completing the instrument**

- Install the old Option FLOPPY DISK DRIVE CMU–U61 or PCMCIA INTERFACE in a new FRONT MODULE in the reverse order.
- Install the new FRONT MODULE in the CMU in the reverse order.

  ***Caution:*** *Make sure to route the cables of the Option FLOPPY DISK DRIVE CMU–U61 or PCMCIA INTERFACE properly, not to catch them and plug them into the MOTHERBOARD before completely sliding the FRONT MODULE into the CMU.*
- Complete the instrument without causing damage to the cables.

**Putting into operation**

- Connect the instrument to the mains and switch on: The built-in FRONT MODULE CONTROLLER registers on the LCD. The BIOS is factory-set to the CMU.
- If necessary, load new software to the FRONT MODULE (see chapter 4, *Firmware update*).
- During startup observe the display.
- When three BEEPs can be heard, press the *MENU SELECT* key.

  The Version Manager is started (see also chapter 4, *Firmware update*).
  The display includes the menu item *FIRMWARE UPDATE AFTER BOARD CHANGE*.
- Press the softkey to the left of the above mentioned menu item.

  The automatic module data adjustment is performed under software control, firmware updates for microprocessors and programmable devices being also performed on the modules. This may take a few minutes.

After the adjustment has been terminated, the operating software starts automatically and the CMU is ready for use and can be operated as usual.

# Replacing the FRONT MODULE CONTROLLER in the FRONT MODULE

(see chapter 5, *spare part list, Current No. 450/455 and explosion drawing 1090.9244.01 D sheet 2/3*)

The FRONT MODULE CONTROLLER is incorporated in the FRONT MODULE. For replacement proceed as follows:

### Opening the instrument and removing the FRONT MODULE

- Switch off the instrument, pull the mains plug and unscrew the rear-panel feet.
- Place the instrument onto the front carrying handles, push the tube upwards and take off.
- Unscrew the four screws of the front handles at the instrument frame on both sides and take off the front handles.
- Unscrew a countersunk screw (if present) at the front on the labeling panel next to the spinwheel and pull off the labeling panel towards the front.
- Unscrew two countersunk screws in the front frame at the top and at the bottom as well as two countersunk screws at the front above the AUX1/2 BNC connectors.
- Unscrew a combi screw at the top of the module support for support of the Option FLOPPY DISK DRIVE CMU–U61 or PCMCIA INTERFACE.
- After unscrewing the two countersunk screws at the top left instrument frame slightly lift the cover at the top of the instrument, slightly shift towards the right and lift off.
- Slightly push the FRONT MODULE from the rear to the front using little pressure.

  ***Note:*** *Note the connecting cables for the Option FLOPPY DISK DRIVE CMU–U61 or PCMCIA INTERFACE that are still connected to the MOTHERBOARD1.*
- After sliding out the FRONT MODULE disconnect the respective connecting cable for the option from the MOTHERBOARD1 as follows:
  - Option FLOPPY DISK DRIVE CMU–U61: The connecting cable is a film cable.
    - Lift the locking bracket of the connector on the MOTHERBOARD1 and remove the film cable.
  - PCMCIA INTERFACE: The connecting cable consists of three ribbon cables.
    - Disconnect the three ribbon cables from the MOTHERBOARD1 connector.
- Take the FRONT MODULE completely out of the CMU.

**Removing the FRONT MODULE CONTROLLER from the FRONT MODULE**

- Unscrew the two countersunk screws on the cover of the Option FLOPPY DISK DRIVE CMU–U61 or PCMCIA INTERFACE and carefully pull out the option from the FRONT MODULE towards the front.
- Place the FRONT MODULE onto a clean surface with the aluminum panel pointing downwards.
- Unscrew the four screws on the mounting plate at the top, bottom and left and carefully swing away the mounting plate towards the rear.
- Pull off the connecting cables to the LCD, DC/AC illumination converter, keyboard membrane and spinwheel.

  ***Note:*** *When pulling off the connecting cables be careful with the cable connecting to the keyboard. It is a film cable which can only be disconnected after sliding up the lock of the film cable plug. Besides, be careful with the ribbon cable connecting to the spinwheel. First loosen the locking brackets of the plug.*
- **MODEL 04**: Pull off the ribbon cable from the hard disk to the FRONT MODULE CONTROLLER and unscrew the four screws of the bracket through the rear of the aluminum panel and remove the hard disk.
- **MODEL 12**: Pull off the ribbon cable from the hard disk to the FRONT MODULE CONTROLLER.
- Disconnect the fan cable from the printed circuit board of the FRONT MODULE CONTROLLER.
- Unscrew the eleven combi screws of the FRONT MODULE CONTROLLER board and take out the FRONT MODULE CONTROLLER.

**Installing the new FRONT MODULE CONTROLLER**

- Carefully insert the new FRONT MODULE CONTROLLER, fasten using the eleven combi screws and reconnect the cable to the fan.
- **MODEL 04**: Carefully insert the hard disk, fasten using the four screws through the rear of the aluminum panel and reconnect the ribbon cable to the FRONT MODULE CONTROLLER.
- **MODEL 12**: Carefully reconnect the ribbon cable to the FRONT MODULE CONTROLLER.
- Replace the memory modules from the old into the new FRONT MODULE CONTROLLER (see replacing the memory modules).
- Carefully insert the cable connectors to the controller board, taking care not to reverse the polarities, and replace the mounting plate in the reverse order.

**Installing the option again and completing the instruments**

- Replace the old Option FLOPPY DISK DRIVE CMU–U61 or PCMCIA INTERFACE in the FRONT MODULE in the reverse order.
- To install the FRONT MODULE1 in the CMU again proceed in the reverse order.

  ***Note:*** *Make sure to route the cables of the Option FLOPPY DISK DRIVE CMU–U61 or PCMCIA INTERFACE properly, not to catch them and insert them on the MOTHERBOARD1 before sliding the FRONT MODULE completely into the CMU.*
- Complete the instrument without causing damage to the cables.

**Putting into operation**

- Connect the instrument to the mains.
- Connect the external keyboard to the keyboard connector on the rear panel of the CMU.
- Switch on the CMU.
- During startup observe the display.
- When three BEEPs can be heard, press the softkey to the left upper side of the LCD: **C:** will appear.

- **MODEL 04**:

- Insert a flash disk with the program FLASH FMR4 (this program is available on R & S Lotus Notes Service Board) in the PCMCIA slot 0 (right drive D:) or a floppy disk with the program FLASH FMR4 in the Option FLOPPY DISK DRIVE CMU-U61.
- Start program FLASH FMR4 with D:\ FLASH FM4.BAT or A:\ FLASH FM4.BAT.

- **MODEL 12**:

- Insert a flash disk with the program FLASH FMR5 (this program is available on R & S Lotus Notes Service Board) in the PCMCIA slot 0 (right drive D:) or a floppy disk with the program FLASH FMR5 in the Option FLOPPY DISK DRIVE CMU-U61.
- Start program FLASH FMR5 with D:\ FLASHFM5.BAT or A:\ FLASHFM5.BAT.

- During the programming of the flash EEPROM the CMU must not be switched off.
- When the prompt C:\ appears then switch off and on the CMU.
- Press the key *DEL* (Delete) on the external keyboard in order to get into the Setup menu.
- Choose the item DEFAULT OPTIMAL (MODEL 04) / LOAD CMU-DEFAULTS (MODEL 12) and press *ENTER*; quit with y and *ENTER*.
- Only if Option FLOPPY DISK DRIVE CMU-U61 is fitted, then choose the item Setup Standard and set FLOPPY A to '1.44 MB 3 ½'. Exit with the *ESC* key.
- Exit Bios Setup with key *ESC* and quit with y (save changes and exit) and press *ENTER*.

The CMU starts the operating software automatically, it is ready for use and can be operated as usual.

## Replacing the Lithium Battery in the FRONT MODULE

(see chapter 5, *spare part list, Current No. 460* and *explosion drawing 1090.9244.01 D sheet 2/3*)

The lithium battery is accommodated on the FRONT MODULE CONTROLLER board inside the FRONT MODULE. For replacement proceed as follows:

***Note:*** *Data in the CMOS RAM will be lost when replacing the lithium battery.*

### Opening the instrument and removing the FRONT MODULE

- Switch off the instrument, pull the mains plug and unscrew the rear-panel feet.
- Place the instrument onto the front carrying handles, push the tube upwards and take off.
- Unscrew the four screws of the front handles at the instrument frame on both sides and take off the front handles.
- Unscrew a countersunk screw (if present) at the front on the labeling panel next to the spinwheel and pull off the labeling panel towards the front.
- Unscrew two countersunk screws in the front frame at the top and at the bottom as well as two countersunk screws at the front above the AUX1/2 BNC connectors.
- Unscrew a combi screw at the top of the module support for support of the Option FLOPPY DISK DRIVE CMU–U61 or PCMCIA INTERFACE.
- After unscrewing the two countersunk screws at the top left instrument frame slightly lift the cover at the top of the instrument, slightly shift towards the right and lift off.
- Slightly push the FRONT MODULE from the rear to the front using little pressure.

  ***Note:*** *Note the connecting cables for the Option FLOPPY DISK DRIVE CMU–U61 or PCMCIA INTERFACE that are still connected to the MOTHERBOARD1.*
- After sliding out the FRONT MODULE disconnect the respective connecting cable for the option from the MOTHERBOARD1 as follows:
  - Option FLOPPY DISK DRIVE CMU–U61: The connecting cable is a film cable.
    - Lift the locking bracket of the connector on the MOTHERBOARD1 and remove the film cable.
  - PCMCIA INTERFACE: The connecting cable consists of three ribbon cables.
    - Disconnect the three ribbon cables from the MOTHERBOARD1 connector.
- Take the FRONT MODULE completely out of the CMU.

**Removing the lithium battery**

- Unscrew the two countersunk screws on the cover of the Option FLOPPY DISK DRIVE CMU–U61 or PCMCIA INTERFACE and carefully pull out the option from the FRONT MODULE towards the front.
- Place the FRONT MODULE onto a clean surface with the aluminum panel pointing downwards.
- Unscrew the four screws on the mounting plate at the top, bottom and right and carefully swing away the mounting plate towards the rear.
- Pull off the connecting cables to the LCD, DC/AC illumination converter, keyboard membrane and spinwheel.

  ***Note:*** *When pulling off the connecting cables be careful with the cable connecting to the keyboard. It is a film cable which can only be disconnected after sliding up the lock of the film cable plug. Besides, be careful with the ribbon cable connecting to the spinwheel. First loosen the locking brackets of the plug.*

- Locate the lithium battery on the controller board (see chapter 5, *explosion drawing 1090.9244.01 D sheet 2/3*).
- Unplug jumper J7 (MODEL 04) and J12 (MODEL 12).
- Carefully unsolder the negative terminal from the soldering lug first using the soldering iron (medium temperature). Then unsolder the positive terminal. If necessary, remove the mechanical lock (cable clamp) and take out the battery.

  ***Note:*** *The lithium battery is of the type 3.4 V ( ∅ 15mm * 25mm ) with soldering lug terminals (spare part list, Current No. 460).*

**Caution!**

*Lithium batteries must not be exposed to high temperatures or fire.*

*Keep away from children.*

*If the battery is replaced improperly, there is danger of explosion. Only replace the battery by R&S type (spare part list, Current No. 460).*

*Lithium batteries are hazardous waste and must be disposed of in dedicated containers.*

*Do not short-circuit the battery!*

**Installing the new battery and completing the instrument**

- Shorten the length of the connecting wires of the new battery as with the old battery and replace with the correct polarity.

  ***Note:*** *Do not short-circuit the battery!*

- If necessary, replace the mechanical lock (cable clamp). First solder the positive terminal to the PC board, then the negative terminal.
- **MODEL 04**: Plug jumper J7 first to the position middle and right (position RAM discharge) and then to middle and left position. Leave jumper J7 at this position (position before battery replacement).
- **MODEL 12**: Plug jumper J12 first to the position middle and left (position RAM discharge) and then to middle and right position. Leave jumper J12 at this position (position before battery replacement).
- Carefully plug the cable connectors to the controller board without reversing the polarities and replace the mounting plate in the reverse order.
- Install the old Option FLOPPY DISK DRIVE CMU–U61 or PCMCIA INTERFACE in the FRONT MODULE in the reverse order.
- Install the FRONT MODULE in the CMU in the reverse order.

  ***Note:*** *Make sure to route the cables of the Option FLOPPY DISK DRIVE CMU–U61 or PCMCIA INTERFACE properly, not to catch them and insert them on the MOTHERBOARD1 before sliding the FRONT MODULE completely into the CMU.*

- Complete the instrument without causing damage to the cables.

**Putting into operation**

- Connect the instrument to the mains.
- Connect the external keyboard to the keyboard connector on the rear panel of the CMU.
- Switch on the CMU.
- Press the key DEL (Delete) on the external keyboard in order to get into the Setup menu
- Choose the item DEFAULT OPTIMAL (MODEL 04) / LOAD CMU-DEFAULTS (MODEL 12) and press *ENTER*; quit with y and *ENTER*.
- Choose the item Setup Standard and set date and time. Exit with *ESC* key.
- Exit BIOS Setup with the key *ESC* and quit with y (save changes and exit) and ENTER.

The CMU starts the operating software automatically, it is ready for use and can be operated as usual.

## Replacing the Hard Disk in the FRONT MODULE

(see chapter 5, *spare part list, Current No. 490* and *495* and *explosion drawing 1090.9244.01 D*)

The hard disk is incorporated in the FRONT MODULE (MODULE 04) or outside on the back of the aluminum panel of the FRONT MODULE (MODEL 12). For replacement proceed as follows:

**Opening the instrument and removing the FRONT MODULE**

- Switch off the instrument, pull the mains plug and unscrew the rear-panel feet.
- Place the instrument onto the front carrying handles, push the tube upwards and take off.

**Only MODEL 04**:

- Unscrew the four screws of the front handles at the instrument frame on both sides and take off the front handles.
- Unscrew a countersunk screw (if present) at the front on the labeling panel next to the spinwheel and pull off the labeling panel towards the front.
- Unscrew two countersunk screws in the front frame at the top and at the bottom as well as two countersunk screws at the front above the AUX1/2 BNC connectors.
- Unscrew a combi screw at the top of the module support for support of the Option FLOPPY DISK DRIVE CMU–U61 or PCMCIA INTERFACE.
- After unscrewing the two countersunk screws at the top left instrument frame, slightly lift the cover at the top of the instrument, slightly shift towards the right and lift off.
- Slightly push the FRONT MODULE from the rear to the front using little pressure.

  ***Note:*** *Note the connecting cables for the Option FLOPPY DISK DRIVE CMU–U61 or PCMCIA INTERFACE that are still connected to the MOTHERBOARD.*

- After sliding out the FRONT MODULE disconnect the respective connecting cable for the option from the MOTHERBOARD1 as follows:

  - Option FLOPPY DISK DRIVE CMU–U61: The connecting cable is a film cable.
    - Lift the locking bracket of the connector on the MOTHERBOARD1 and remove the film cable.
  - Option PCMCIA INTERFACE: The connecting cable consists of three ribbon cables.
    - Disconnect the three ribbon cables from the MOTHERBOARD1 connector.

- Take the FRONT MODULE completely out of the CMU.

**Removing the hard disk from the FRONT MODULE**

**MODEL 04**:

- Unscrew the two countersunk screws on the cover of the Option FLOPPY DISK DRIVE CMU–U61 or PCMCIA INTERFACE and carefully pull out the option from the FRONT MODULE towards the front.
- Place the FRONT MODULE onto a clean surface with the aluminum panel pointing downwards.
- Unscrew the four screws on the mounting plate at the top, bottom and right and carefully swing away the mounting plate towards the rear.
- Pull off the connecting cables to the LCD, DC/AC illumination converter, keyboard membrane and spinwheel.

  ***Note:*** *When pulling off the connecting cables be careful with the cable connecting to the keyboard. It is a film cable which can only be disconnected after sliding up the lock of the film cable plug. Besides, be careful with the ribbon cable connecting to the spinwheel. First loosen the locking brackets of the plug.*

- Remove the ribbon cable from the hard disk to the FRONT MODULE CONTROLLER, unscrew the four screws of the bracket through the rear of the aluminum panel and take out the hard disk.

**MODEL 12**:

- After unscrewing the two countersunk screws at the top left instrument frame, slightly lift the cover at the top of the instrument, slightly shift towards the right and lift off.
- Remove the ribbon cable from the hard disk to the FRONT MODULE CONTROLLER, unscrew the two screws on the back of the aluminum panel of the FRONT MODULE and pull out the harddisk. Unscrew the hard disk from the disk holder.

**Installing the new hard disk**

**MODEL 04**:

- Carefully insert the new hard disk, fasten with the four screws of the bracket through the rear of the aluminum panel and connect the ribbon cable to the FRONT MODULE CONTROLLER.

  ***Note:*** *The hard disk is an IDE hard disk which can be obtained under R&S spare part list, Current No. 490. It is already formatted for the CMU and contains the operating system.*

- Carefully plug the cable connectors to the controller board without reversing the polarities and replace the mounting plate in the reverse order.

**Only MODEL 04: Installing the option again and completing the instrument**

- Install the old Option FLOPPY DISK DRIVE CMU–U61 or PCMCIA INTERFACE in the FRONT MODULE in the reverse order.
- Then install the FRONT MODULE in the CMU in the reverse order.

  ***Note:*** *Make sure to route the cables of the Option FLOPPY DISK DRIVE CMU–U61 or PCMCIA INTERFACE properly, not to catch them and insert them on the MOTHERBOARD1 before sliding the FRONT MODULE completely into the CMU.*

- Complete the instrument without causing damage to the cables.

**MODEL 12**:

- Carefully fit the new hard disk, fasten with the four screws to the disk holder. Insert the hard disk with the disk holder on the back of the aluminum case of the FRONT MODULE. Be careful with the lower cover plate locking in the concerning opening.
  Connect the ribbon cable to the FRONT MODULE CONTROLLER. Fit the disk holder with two screws to the aluminum panel of the FRONT MODULE.
- Complete the instrument without causing damage to the cables.

**Putting into operation**

- Connect the instrument to the mains and switch on: The built-in *FRONT MODULE CONTROLLER* registers on the LCD. The BIOS is factory-set to the CMU, the new hard disk is automatically detected.
- Install the new software (see chapter 4, *Firmware update*).

## Replacing the Memory Modules in the FRONT MODULE

(see chapter 5, *spare part list, Current No. 470* or *480 (MODEL 04)*
*Current No. 475 or 485 (MODEL 12)* and *explosion drawing 1090.9244.01 D sheet 2/3*)

The memory modules are incorporated in the FRONT MODULE. The FRONT MODULE CONTROLLER features two SIMM-72 slots, in each of which up to 32 MB memory can be fitted (MODEL 04) or two SODIMM-144 slots, in each of which up to 64 MB memory can be fitted (MODEL 12). The BIOS automatically detects the size of the memory modules. For replacement proceed as follows:

**Opening the instrument and removing the FRONT MODULE**

- ➢ Switch off the instrument, pull the power plug, unscrew the rear-panel feet.
- ➢ Place the instrument onto the front carrying handles, push the tube upwards and take off.
- ➢ Unscrew the four screws of the front handles from the instrument frame on both sides and take off the front handles.
- ➢ Unscrew a countersunk screw (if present) at the front on the labeling panel next to the spinwheel and pull off the labeling panel towards the front.
- ➢ Unscrew two countersunk screws in the front frame at the top and at the bottom as well as two countersunk screws at the front above the AUX1/2 BNC connectors.
- ➢ Unscrew a combi screw at the top of the module support for support of the Option FLOPPY DISK DRIVE CMU–U61 or PCMCIA INTERFACE.
- ➢ After unscrewing the two countersunk screws at the top left instrument frame slightly lift the cover at the top of the instrument, slightly shift towards the right and lift off.
- ➢ Slightly push the FRONT MODULE from the rear to the front using little pressure.

  ***Note:*** *Note the connecting cables for the Option FLOPPY DISK DRIVE CMU–U61 or PCMCIA INTERFACE that are still connected to the MOTHERBOARD1.*
- ➢ After sliding out the FRONT MODULE disconnect the respective connecting cable for the option from the MOTHERBOARD as follows:
  - Option FLOPPY DISK DRIVE CMU–U61: The connecting cable is a film cable.
    - ➢ Lift the locking bracket of the connector on the MOTHERBOARD1 and remove the film cable.
  - PCMCIA INTERFACE: The connecting cable consists of three ribbon cables.
    - ➢ Disconnect the three ribbon cables from the MOTHERBOARD1 connector.
- ➢ Take the FRONT MODULE completely out of the CMU.

**Making the memory modules accessible**

- Unscrew the two countersunk screws on the cover of the Option FLOPPY DISK DRIVE CMU–U61 or PCMCIA INTERFACE and carefully pull out the option from the FRONT MODULE towards the front.
- Place the FRONT MODULE onto a clean surface with the aluminum panel pointing downwards.
- Unscrew the four screws on the mounting plate at the top, bottom and right and carefully swing away the mounting plate towards the rear.
- Pull off the connecting cables to the LCD, DC/AC illumination converter, keyboard membrane and spinwheel.

***Note:*** *When pulling off the connecting cables be careful with the cable connecting to the keyboard. It is a film cable which can only be disconnected after sliding up the lock of the film cable plug. Besides, be careful with the ribbon cable connecting to the spinwheel. First loosen the locking brackets of the plug.*

**Removing the memory module**

- Remove the old module: Carefully bend the lateral brackets towards the outside and pull out the memory module.

**Installing the new memory module and completing the instrument**

- Insert the new module: insert the memory module into the slot, slightly press towards the rear and engage the brackets on the sides.

***Note:*** ***MODEL 04****: The memory modules can be obtained with the size 16 MB (spare part list, Current No. 470) and 32 MB (spare part list, Current No. 480). It is possible to insert two of these modules, even of different size. First fit slot 1 (U35) and then slot 2 (U36).*

***MODEL 12****: The memory modules can be obtained with the size 32 MB (spare part list, Current No. 475) and 64 MB (spare part list, Current No. 485). It is possible to insert two of these modules, even of different size. It is not recommended to fit more than 64 MB in sum. First fit slot 1 (U24) and then slot 2 (U25).*

- Carefully plug the cable connectors to the controller board without reversing the polarities and replace the mounting plate in the reverse order.
- Install the old Option FLOPPY DISK DRIVE CMU–U61 or PCMCIA INTERFACE in the FRONT MODULE in the reverse order.

***Note:*** *Make sure to route the cables of the Option FLOPPY DISK DRIVE CMU–U61 or PCMCIA INTERFACE properly, not to catch them and insert them on the MOTHERBOARD before sliding the FRONT MODULE completely into the CMU.*

- Complete the instrument without causing damage to the cables.

**Putting into operation**

- Connect the instrument to the mains and switch on. The built-in FRONT MODULE CONTROLLER registers on the LCD. The BIOS is factory-set to the CMU.

- If required, supplement the BIOS Setup as follows:
  - Connect external keyboard to keyboard connector on the rear panel of the CMU.
  - If the message 'CMOS Memory Size wrong, RUN SETUP, Press F1 to resume' appears, press the F1 key.
  - Quit the BIOS setup using the ESC key and the RETURN key.

The CMU starts the operating software automatically and is ready for use and can be operated as usual.

## Replacing the LCD and/or DC/AC Converter in the FRONT MODULE

(see chapter 5, *spare part list, LCD: Current No. 360/365, DC/AC Converter: Current No. 410/415* and *explosion drawing 1090.9244.01 D sheet 2/3*)

The LCD is accommodated on the mounting plate of the FRONT MODULE together with the associated DC/AC converter. It is connected to the FRONT MODULE CONTROLLER via cables, which can also be replaced individually. For replacement proceed as follows:

**Opening the instrument and removing the FRONT MODULE**

- ➢ Switch off the instrument, pull the mains plug and unscrew the rear-panel feet.
- ➢ Place the instrument onto the front carrying handles, push the tube upwards and take off.
- ➢ Unscrew the four screws of the front handles at the instrument frame on both sides and take off the front handles.
- ➢ Unscrew a countersunk screw (if present) at the front on the labeling panel next to the spinwheel and pull off the labeling panel towards the front.
- ➢ Unscrew two countersunk screws in the front frame at the top and at the bottom as well as two countersunk screws at the front above the AUX1/2 BNC connectors.
- ➢ Unscrew a combi screw at the top of the module support for support of the Option FLOPPY DISK DRIVE CMU–U61 or PCMCIA INTERFACE.
- ➢ After unscrewing the two countersunk screws at the top left instrument frame slightly lift the cover at the top of the instrument, slightly shift towards the right and lift off.
- ➢ Slightly push the FRONT MODULE from the rear to the front using little pressure.

  ***Note:*** *Note the connecting cables for the Option FLOPPY DISK DRIVE CMU–U61 or PCMCIA INTERFACE that are still connected to the MOTHERBOARD1.*

- ➢ After sliding out the FRONT MODULE disconnect the respective connecting cable for the option from the MOTHERBOARD1 as follows:
  - Option FLOPPY DISK DRIVE CMU–U61: The connecting cable is a film cable.
    - ➢ Lift the locking bracket of the connector on the MOTHERBOARD1 and remove the film cable.
  - PCMCIA INTERFACE: The connecting cable consists of three ribbon cables.
    - ➢ Disconnect the three ribbon cables from the MOTHERBOARD1 connector.
- ➢ Take the FRONT MODULE completely out of the CMU.

**Making the LCD accessible**

- Unscrew the two countersunk screws on the cover of the Option FLOPPY DISK DRIVE CMU–U61 or PCMCIA INTERFACE and carefully pull out the option from the FRONT MODULE towards the front.
- Place the FRONT MODULE onto a clean surface with the aluminum panel pointing downwards.
- Unscrew the four screws on the mounting plate at the top, bottom and right and carefully swing away the mounting plate towards the rear.
- Pull off the connecting cables to the LCD, DC/AC illumination converter, keyboard membrane and spinwheel.

***Note:*** *When pulling off the connecting cables be careful with the cable connecting to the keyboard. It is a film cable which can only be disconnected after sliding up the lock of the film cable plug. Besides, be careful with the ribbon cable connecting to the spinwheel. First loosen the locking brackets of the plug.*

**Removing the LCD and/or DC/AC Converter**

- Unscrew the two screws of the DC/AC converter shielding and pull off the plug of the connecting cable to the DC/AC converter.
- If required, unscrew the two screws of the DC/AC converter and loosen the connecting cable to the FRONT MODULE CONTROLLER.
- Remove the DC/AC converter.
- Loosen the four screws of the LCD shielding and take off the shielding.

**Warning!**

*If there are spacing pieces under the LCD shielding, use them again for installation.*

- Loosen the connecting cable to the FRONT MODULE CONTROLLER by unscrewing the two screws and remove.
- Unscrew the four screws of the LCD on the mounting plate and remove the LCD.

**Installing the new LCD and/or DC/AC converter and completing the instrument**

- Insert new LCD and/or DC/AC converter in the reverse order, connect all connecting cables in the correct position and replace all screws.
- Carefully plug the cable connectors to the controller board without reversing the polarities and replace the mounting plate in the reverse order.
- Replace the old Option FLOPPY DISK DRIVE CMU–U61 or PCMCIA INTERFACE in the FRONT MODULE in the reverse order.

***Note:*** *Make sure to route the cables of the Option FLOPPY DISK DRIVE CMU–U61 or PCMCIA INTERFACE properly, not to catch them and insert them on the MOTHERBOARD before sliding the FRONT MODULE completely into the CMU.*

- Complete the instrument without causing damage to the cables.

**Putting into operation**

- Connect the instrument to the mains and switch on.

The built-in front-module controller registers on the LCD and starts the operating software.

# Replacing the Keyboard Membrane and/or Mat on the FRONT MODULE

(see chapter 5, *spare part list, Current No. 290 (Keyboard Mat) / 300 (Keyboard Membrane)* and *explosion drawing 1090.9244.01 D sheet 2/3*)

The keyboard membrane is the contact film for the rubber keys (mat) behind the labeling panel and the keyboard frame. For replacement proceed as follows:

**Opening the instrument and removing the FRONT MODULE**

- ➢ Switch off the instrument, pull the mains plug and unscrew the rear-panel feet.
- ➢ Place the instrument onto the front carrying handles, push the tube upwards and take off.
- ➢ Unscrew the four screws of the front handles at the instrument frame on both sides and take off the front handles.
- ➢ Unscrew a countersunk screw (if present) at the front on the labeling panel next to the spinwheel and pull off the labeling panel towards the front.
- ➢ Unscrew two countersunk screws in the front frame at the top and at the bottom as well as two countersunk screws at the front above the AUX1/2 BNC connectors.
- ➢ Unscrew a combi screw at the top of the module support for support of the Option FLOPPY DISK DRIVE CMU–U61 or PCMCIA INTERFACE.
- ➢ After unscrewing the two countersunk screws at the top left instrument frame slightly lift the cover at the top of the instrument, slightly shift towards the right and lift off.
- ➢ Slightly push the FRONT MODULE from the rear to the front using little pressure.

  ***Note:*** *Note the connecting cables for the Option FLOPPY DISK DRIVE CMU–U61 or PCMCIA INTERFACE that are still connected to the MOTHERBOARD1.*

- ➢ After sliding out the FRONT MODULE disconnect the respective connecting cable for the option from the MOTHERBOARD1 as follows:
  - Option FLOPPY DISK DRIVE CMU–U61: The connecting cable is a film cable.
    - ➢ Lift the locking bracket of the connector on the MOTHERBOARD1 and remove the film cable.
  - PCMCIA INTERFACE: The connecting cable consists of three ribbon cables.
    - ➢ Disconnect the three ribbon cables from the MOTHERBOARD1 connector.
- ➢ Take the FRONT MODULE completely out of the CMU.

**Removing the membrane**

- Unscrew the two countersunk screws on the cover of the Option FLOPPY DISK DRIVE CMU–U61 or PCMCIA INTERFACE and carefully pull out the option from the FRONT MODULE towards the front.
- Place the FRONT MODULE onto a clean surface with the aluminum panel pointing downwards.
- Unscrew the four screws on the mounting plate at the top, bottom and right and carefully swing away the mounting plate towards the rear.
- Pull off the connecting cables to the LCD, DC/AC converter, membrane and spinwheel.

  ***Note:*** *When pulling off the connecting cables be careful with the cable connecting to the keyboard. It is a film cable which can only be disconnected after sliding up the lock of the film cable plug. Besides, be careful with the ribbon cable connecting to the spinwheel. First loosen the locking brackets of the plug.*
- Place the mounting plate onto the surface with the keyboard frame pointing upwards and unscrew the 10 countersunk screws of the keyboard frame.
- Pull off the knob of the spinwheel.
- Lift off the keyboard frame as well as the mat which is now accessible.
- Lift off the membrane and pull the connecting cable through the hole of the mounting plate.

**Installing the new membrane and completing the instrument**

- Insert the new membrane and/or mat in the reverse order, insert the mat at the correct position (observe the labeling of the keys!) and fasten the keyboard frame with screws.
- Carefully plug the cable connectors to the controller board without reversing the polarities and replace the mounting plate in the reverse order.
- Install the old Option FLOPPY DISK DRIVE CMU–U61 or PCMCIA INTERFACE in the FRONT MODULE in the reverse order.
- Install the FRONT MODULE in the CMU in the reverse order.

  ***Note:*** *Make sure to route the cables of the Option FLOPPY DISK DRIVE CMU–U61 or PCMCIA INTERFACE properly, not to catch them and insert them on the MOTHERBOARD1 before sliding the FRONT MODULE completely into the CMU.*
- Complete the instrument without causing damage to the cables.

**Putting into operation**

- Connect the instrument to the mains and switch on.

The built-in FRONT MODULE CONTROLLER registers on the LCD and starts the operating software.

## Replacing the Labeling Panel on the FRONT MODULE

(see chapter 5, *spare part list, Current No. 260* and *explosion drawing 1100.0008.01 D sheet 2*)
The labeling panel is the outer front panel which carries the labeling of all the parts on the front side of the CMU. For replacement proceed as follows:

**Removing the old labeling panel**

- Switch off the instrument and pull the mains plug.
- Unscrew the four screws of the front handles at the instrument frame on both sides and take off the front handles.
- Unscrew a countersunk screw (if present) at the front on the labeling panel next to the spinwheel and pull off the labeling panel towards the front.

**Installing the new labeling panel and completing the instrument**

- Install the new labeling panel and tighten all screws.
- Complete the instrument.

**Putting into operation**

- Connect the instrument to the mains and switch on.

The built-in FRONT MODULE CONTROLLER registers on the LCD and starts the operating software.

# Replacing the Options FLOPPY DISK DRIVE CMU-B61 or PCMCIA INTERFACE

(see chapter 5, *spare part list, Current No. 780 (FLOPPY DISK DRIVE)* and *830 (PCMCIA INTERFACE,* and *explosion drawing 1100.0008.01 D sheet 2*)

The options FLOPPY DISK DRIVE or PCMCIA INTERFACE are fitted on the FRONT MODULE. For replacement proceed as follows:

**Opening the instrument and removing the FRONT MODULE**

- Switch off the instrument, pull the mains plug and unscrew the rear-panel feet.
- Place the instrument onto the front carrying handles, push the tube upwards and take off.
- Unscrew the four screws of the front handles at the instrument frame on both sides and take off the front handles.
- Unscrew a countersunk screw (if present) at the front on the labeling panel next to the spinwheel and pull off the labeling panel towards the front.
- Unscrew two countersunk screws in the front frame at the top and at the bottom as well as two countersunk screws at the front above the AUX1/2 BNC connectors.
- Unscrew a combi screw at the top of the module support for support of the Option FLOPPY DISK DRIVE CMU–U61 or PCMCIA INTERFACE.
- After unscrewing the two countersunk screws at the top left instrument frame slightly lift the cover at the top of the instrument, slightly shift towards the right and lift off.
- Slightly push the FRONT MODULE from the rear to the front using little pressure.

  ***Note:*** *Note the connecting cables for the Option FLOPPY DISK DRIVE CMU–U61 or PCMCIA INTERFACE that are still connected to the MOTHERBOARD1.*

- After sliding out the FRONT MODULE disconnect the respective connecting cable for the option from the MOTHERBOARD1 as follows:
  - Option FLOPPY DISK DRIVE CMU–U61: The connecting cable is a film cable.
    - Lift the locking bracket of the connector on the MOTHERBOARD1 and remove the film cable.
  - PCMCIA INTERFACE: The connecting cable consists of three ribbon cables.
    - Disconnect the three ribbon cables from the MOTHERBOARD1 connector.
- Take the FRONT MODULE completely out of the CMU.

**Replacing the option**

- Unscrew the two countersunk screws on the cover of the Option FLOPPY DISK DRIVE CMU–U61 or PCMCIA INTERFACE and carefully pull out the option from the FRONT MODULE towards the front.
- Option FLOPPY DISK DRIVE: Unscrew the countersunk screws on the frame of the FLOPPY DISK DRIVE and take out the FLOPPY DISK DRIVE.
- Install the new FLOPPY DISK DRIVE or PCMCIA INTERFACE in the FRONT MODULE in the reverse order.
- Install the FRONT MODULE in the CMU in the reverse order.

***Note:*** *Make sure to route the cables of the Option FLOPPY DISK DRIVE CMU–U61 or PCMCIA INTERFACE properly, not to catch them and insert them on the MOTHERBOARD1 before sliding the FRONT MODULE completely into the CMU.*

**Completing the instrument and putting into operation**

- Complete the instrument without causing damage to the cables.
- Connect the instrument to the mains and switch on.

- If the Option FLOPPY DISK DRIVE CMU-B61 is replaced by PCMCIA INTERFACE, the following BIOS setup modification will be necessary:
  - Connect the external keyboard to the keyboard connector at the rear of the CMU.
  - Switch the CMU off and on.
  - Press the hardkey 'Delete' at the external keyboard to get in the BIOS setup.
  - Select *Setup* with cursor keys and confirm with *ENTER*.
  - Select 'Floppy A' with cursor keys and confirm with *ENTER*.
  - Select 'Not installed' with cursor keys and confirm with *ENTER*.
  - Quit BIOS Setup by pressing twice the hardkey *ESC* and confirm with *ENTER*. The CMU starts automatically.

- If PCMCIA INTERFACE is replaced by the Option FLOPPY DISK DRIVE CMU-B61, the following BIOS Setup modification will be necessary:
  - Connect the external keyboard to the keyboard connector at the rear of the CMU.
  - Switch the CMU off and on.
  - Press the hardkey 'Delete' at the external keyboard to get in the BIOS Setup.
  - Select *Setup* with cursor keys and confirm with *ENTER*.
  - Select 'Floppy A' with cursor keys and confirm with *ENTER*.
  - Select '1.44 MB 3 ½' with cursor keys and confirm with *ENTER*.
  - Quit BIOS Setup by pressing twice the hardkey *ESC* and confirm with *ENTER*. The CMU starts automatically.

The built-in FRONT MODULE CONTROLLER registers on the LCD and starts the operating software.

## Replacing the RF FRONTEND

(see chapter 5, *spare part list, Current No. 520* and *explosion drawing 1100.0008.01 D sheet 2*)

The RF FRONTEND is installed at the bottom of the CMU at the front right. For replacement proceed as follows:

**Opening the instrument and removing the RF FRONTEND**

- Switch off the instrument, pull the mains plug and unscrew the rear-panel feet.
- Place the instrument onto the front carrying handles, push the tube upwards and take off.
- Place the instrument upside down to make the bottom accessible.
- Pull off the ribbon cable to the MOTHERBOARD on the RF FRONTEND. Completely unscrew RF SMA coax cables to the RXTX BOARD1 (if present, also those to the RXTX2 BOARD and RXTXAUX1/2 connectors) on the RF FRONTEND and RXTX BOARD1 using a special wrench*.
- Unscrew the two countersunk screws at the bottom front of the front frame and one countersunk screw on the side panel of the CMU for supporting the RF FRONTEND.
- Pull the RF FRONTEND approx. 20 mm towards the rear and then swing towards the bottom.

**Installing the new RF FRONTEND MODULE and completing the instrument**

- Insert the RF FRONTEND into the instrument in the reverse order and connect all cables.
- Complete the instrument without causing damage to the cables.
- Connect the instrument to the mains and switch on.

**Automatic module data adjustment**

- During startup observe the display.
- When three BEEPs can be heard, press the *MENU SELECT* key.

  The version manager is started (see also chapter 4, *Firmware update*). The display includes the menu item *FIRMWARE UPDATE AFTER BOARD CHANGE*.
- Press the softkey to the left of the above mentioned menu item.
  The automatic module data adjustment is performed under software control, firmware updates for microprocessors and programmable devices being performed as well. This may take a few minutes.

After the adjustment has been terminated, the operating software starts automatically and the CMU is ready for use and complies with the specifications, except for the level accuracy.
In order to achieve the level accuracy described in the data sheet, a so-called path error data record is necessary.
To this end, the CMU must be measured using the test system ACS 100 (see chapter 1, *Performance Test*).

* available in CMU-Service Kit CMU-Z3 (1100.7690.02)

## Replacing the REFERENCE BOARD

(see chapter 5, *spare part list, Current No. 540* and *explosion drawing 1100.0008.01 D sheet 2*)

The REFERENCE BOARD is installed at the front right top of the CMU as plug-in module in the cage. For replacement proceed as follows:

**Opening the instrument and removing the REFERENCE BOARD**

- Switch off the instrument, pull the mains plug and unscrew the rear-panel feet.
- Place the instrument onto the front carrying handles, push the tube upwards and take off.
- Unscrew the combi screw from the locking bracket of the module in the vicinity of the instrument fan and fold up.
- Pull off all MMCX plug-in cables (using a pull-out tool*) from the top of the REFERENCE BOARD and pull out the module towards the top with the help of the locking bracket.

**Installing the new REFERENCE BOARD and completing the instrument**

- Insert the new REFERENCE BOARD in the instrument in the reverse order and connect all MMCX plug-in cables.
- Perform manual adjustment +5 VDC reference voltage and TCXO adjustment as described in chapter 2.
- Complete the instrument without causing damage to the cables.
- Connect the instrument to the mains and switch on.

**Automatic module data adjustment**

- During startup observe the display.
- When three BEEPs can be heard, press the *MENU SELECT* key.
  The version manager is started (see also chapter 4, *Firmware update*). The display includes the menu item *FIRMWARE UPDATE AFTER BOARD CHANGE*.
- Press the softkey to the left of the above mentioned menu item.
  The automatic module data adjustment is performed under software control, firmware updates for microprocessors and programmable devices being performed as well. This may take a few minutes.

After the adjustment has been terminated, the operating software starts automatically and the CMU is ready for use and complies with the specifications.

* available in CMU-Service Kit CMU-Z3 (1100.7690.02)

## Replacing the RXTX BOARD1

(see chapter 5, *spare part list, Current No. 550* and *explosion drawing 1100.0008.01 D sheet 2*)

The RXTX BOARD1 is installed in the module support as plug-in module. For replacement proceed as follows:

**Opening the instrument and removing the RXTX BOARD1**

- Switch off the instrument, pull the mains plug and unscrew the rear-panel feet.
- Place the instrument onto the front carrying handles, push the tube upwards and take off.
- After unscrewing the two countersunk screws at the top left instrument frame, slightly lift the cover at the top of the instrument, slightly shift towards the right and lift off.
- Place the instrument to the left side and unscrew the two RF SMA coax cables at the bottom of the RXTX BOARD1 using a special wrench*. Likewise pull off the MMCX plug-in cable (using a pull-out tool*) from the bottom.
- Pull off all MMCX plug-in cables from the top of the RXTX1 BOARD and pull out the board using the two levers on both sides.

**Installing the new RXTX BOARD1 and completing the instrument**

- Insert the new RXTX BOARD1 into the instrument in the reverse order and carefully connect all the MMCX plug-in and RF SMA coax cables.
- Complete the instrument without causing damage to the cables.
- Connect the instrument to the mains and switch on.

**Automatic module data adjustment**

- During startup observe the display.
- When three BEEPs can be heard, press the *MENU SELECT* key.

  The version manager is started (see also chapter 4, *Firmware update*). The display includes the menu item *FIRMWARE UPDATE AFTER BOARD CHANGE*.
- Press the softkey to the left of the above mentioned menu item.
  The automatic module data adjustment is performed under software control, firmware updates for microprocessors and programmable devices being performed as well. This may take a few minutes.

After the adjustment has been terminated, the operating software starts automatically and the CMU is ready for use and complies with the specifications, except for the high-precision level accuracy.
In order to achieve the level accuracy as described in the data sheet, a so-called path error data record is necessary.
To this end, the CMU must be measured using the test system ACS 100 (see chapter 1, *Performance Test*).

* available in CMU-Service Kit CMU-Z3 (1100.7690.02)

# Replacing the TR-CORRECTION MODULE in the RXTX BOARD1

(see chapter 5, *spare part list, Current No. 555* and *explosion drawing 1100.0008.01 D*)

The TR-CORRECTION MODULE is incorporated in the RXTX1 BOARD as sandwich module. For replacement proceed as follows:

**Opening the instrument and removing the TR-CORRECTION MODULE**

- Switch off the instrument, pull the mains plug and unscrew the rear-panel feet.
- Place the instrument onto the front carrying handles, push the tube upwards and take off.
- After unscrewing the two countersunk screws at the top left instrument frame, slightly lift the cover at the instrument top, slightly push to the right and lift off.
- Place the instrument to the left side and unscrew the two RF SMA coax cables at the bottom of the RXTX BOARD1 using a special wrench. Likewise, pull off the MMCX plug-in cable at the bottom.
- Pull off all the MMCX plug-in cables (using a pull-out tool*) from the top of the RXTX BOARD1 and pull off the module towards the top using the two levers on the right and left.
- Unscrew one screw of each cooling plate, pull off the cooling plates towards the side and then unscrew all screws of the RXTX aluminum cover shells. Then the cover shells of the top and bottom can be removed.
- Pull off the sandwich module TR-CORRECTION MODULE (using a pull-out tool*) from the RXTX BOARD1.

**Installing the new TR-CORRECTION BOARD and completing the instrument**

- Insert the new TR-CORRECTION MODULE.
- Reinsert the cover shells in the reverse order and fasten with screws. Attach the cooling plates again.
- Insert the RXTX BOARD1 into the instrument in the reverse order and carefully connect all the MMCX plug-in cables and RF-SMA coax cables.
- Complete the instrument without causing damage to the cables.
- Connect the instrument to the mains and switch on.

**Automatic module data adjustment**

- During startup observe the display.
- When three BEEPs can be heard, press the *MENU SELECT* key.
  The version manager is started (see also chapter 4, *Firmware update*). The display includes the menu item *FIRMWARE UPDATE AFTER BOARD CHANGE*.
- Press the softkey to the left of the above mentioned menu item.
  The automatic module data adjustment is performed under software control, firmware updates for microprocessors and programmable devices being performed as well. This may take a few minutes.

After the adjustment has been terminated, the operating software starts automatically and the CMU is ready for use and complies with the specifications, except for the high-precision level accuracy.
In order to achieve the level accuracy as described in the data sheet, a so-called path error data record is necessary.

To this end, the CMU must be measured using the test system ACS 100 (see chapter 1, *Performance Test*).

* available in CMU-Service Kit CMU-Z3 (1100.7690.02)

# Replacing the DIGITAL BOARD

(see chapter 5, *spare part list, Current No. 570* and *explosion drawing 1100.0008.01 D sheet 2*)

The DIGITAL BOARD is incorporated in the module support as plug-in module. For replacement proceed as follows:

### Opening the instrument and removing the DIGITAL BOARD

- Switch off the instrument, pull the mains plug and unscrew the rear-panel feet.
- Place the instrument onto the front carrying handles, push the tube upwards and take off.
- After unscrewing the two countersunk screws at the top left instrument frame, slightly lift the cover at the instrument top, slightly push to the right and lift off.
- Pull off all the MMCX plug-in cables (using a pull-out tool*) from the top of the DIGITAL BOARD and pull off the module towards the top using the two levers on the right and left.

### Installing the new DIGITAL BOARD and completing the instrument

- Insert the new DIGITAL BOARD into the instrument in the reverse order and connect all the MMCX plug-in cables.
- Complete the instrument without causing damage to the cables.
- Connect the instrument to the mains and switch on.

### Automatic module data adjustment

- During startup observe the display.
- When three BEEPs can be heard, press the *MENU SELECT* key.
  The version manager is started (see also chapter 4, *Firmware update*). The display includes the menu item *FIRMWARE UPDATE AFTER BOARD CHANGE*.
- Press the softkey to the left of the above mentioned menu item.
  The automatic module data adjustment is performed under software control, firmware updates for microprocessors and programmable devices being performed as well. This may take a few minutes.

After the adjustment has been terminated, the operating software starts automatically and the CMU is ready for use and complies with the specifications, except for the high-precision level accuracy.
In order to achieve the level accuracy as described in the data sheet, a so-called path error data record is necessary.
To this end, the CMU must be measured using the test system ACS 100 (see chapter 1, *Performance Test*).

* available in CMU-Service Kit CMU-Z3 (1100.7690.02)

# Replacing the MODULES: ADC MODULE1, DDC MODULE1, TXDSP MODULE1, AUC MODULE1 in the DIGITAL BOARD

(see chapter 5, *spare part list, Current No. 590 (ADC MODULE1), Current No. 580 (DDC MODULE1), Current No. 600 (TXDSP MODULE1), Current No. 610 (AUC MODULE1)* and *explosion drawing 1100.1791.01 D sheet 2*)

The sandwich modules ADC MODULE1, DDC MODULE1, TXDSP MODULE1 and AUC MODULE1 are installed in the DIGITAL BOARD as plug-in modules. For replacement proceed as follows:

**Opening the instrument and removing the modules**

- Switch off the instrument, pull the mains plug and unscrew the rear-panel feet.
- Place the instrument onto the front carrying handles, push the tube upwards and take off.
- After unscrewing the two countersunk screws at the top left instrument frame, slightly lift the cover at the instrument top, slightly push to the right and lift off.
- Pull off all the MMCX plug-in cables (using a pull-out tool*) from the top of the DIGITAL BOARD and pull off the module towards the top using the two levers on the right and left.
- Remove the cover of the higher HVC side (B-side) by loosening the cover screws.
- Carefully lever out the respective sandwich module (using a pull-out tool*) in the case of the ADC MODULE loosen the two fixing screws before.

**Installing the new sandwich module and completing the instrument**

- Replace by a new module.

**Caution!**

*Take care to insert the module at the correct position.*

*The heat conducting mats have to be stuck to the components of the modules (see chapter 5, drawing 1100.1791.01 D sheet 2).*

- Insert the DIGITAL BOARD into the instrument in the reverse order and connect all the MMCX plug-in cables.
- Complete the instrument without causing damage to the cables.
- Connect the instrument to the mains and switch on.

* available in CMU-Service Kit CMU-Z3 (1100.7690.02)

**Automatic module data adjustment**

- During startup observe the display.
- When three BEEPs can be heard, press the *MENU SELECT* key.
  The version manager is started (see also chapter 4, *Firmware update*). The display includes the menu item *FIRMWARE UPDATE AFTER BOARD CHANGE*.
- Press the softkey to the left of the above mentioned menu item.
  The automatic module data adjustment is performed under software control, firmware updates for microprocessors and programmable devices being performed as well. This may take a few minutes.

After the adjustment has been terminated, the operating software starts automatically and the CMU is ready for use and complies with the specifications, except for the high-precision level accuracy.
In order to achieve the level accuracy as described in the data sheet, a so-called path error data record is necessary.
To this end, the CMU must be measured using the test system ACS 100 (see chapter 1, *Performance Test*).

# Replacing the Option OCXO REFERENCE OSC. CMU-B11 or CMU-B12

*(see chapter 5, spare part list, Current No. 690 (OCXO REFERENCE OSC. CMU-B11), 710 (OCXO REFERENCE OSC. CMU-B12)* and *explosion drawing 1100.0008.01 D sheet 2)*

The Option OCXO REFERENCE OSC. is fitted at the right side panel below the instrument fan in the CMU. For replacement proceed as follows:

**Opening the instrument and removing the OPTION OCXO REFERENCE OSC.**

- Switch off the instrument, pull the mains plug and unscrew the rear-panel feet.
- Place the instrument onto the front carrying handles, push the tube upwards and take off.
- Place the instrument onto the left side, locate the OPTION OCXO *(see chapter 5, explosion drawing 1100.0008.01 D sheet 2)* and unscrew the two combi screws on the module support and one combi screw on the MOTHERBOARD1.
- Pull off OPTION OCXO REFERENCE OSC. from the MOTHERBOARD1 connector, slightly tilt and swing out towards the bottom.

**Installing the new OPTION OCXO REFERENCE OSC. and completing the instrument**

- Install the new OPTION OCXO REFERENCE OSC. in the reverse order. Tighten the three combi screws again.

  ***Note:*** *Make sure that the 10-pin connector to the MOTHERBOARD is inserted correctly.*
- Complete the instrument without causing damage to the cables.

**Manual OCXO adjustment**

- Connect the instrument to the mains and switch on.
- Check the frequency accuracy and, if necessary, perform manual OCXO adjustment as described in chapter 2.

## Replacing the Option UNIVERSAL SIGNALLING UNIT CMU-B21

(see chapter 5, *spare part list, Current No. 730 and explosion drawing 1100.0008.01 D sheet 2*)

The OPTION UNIV. SIGN. UNIT is installed in the module support as plug-in module. For replacement proceed as follows:

**Opening the instrument and removing the OPTION UNIV. SIGN. UNIT**

- Switch off the instrument, pull the mains plug and unscrew the rear-panel feet.
- Place the instrument onto the front carrying handles, push the tube upwards and take off.
- After unscrewing the two countersunk screws at the top left instrument frame slightly lift the cover at the top of the instrument, slightly shift towards the right and lift off.
- Take out the module using the two levers on the right and left.

**Installing the new OPTION UNIV. SIGN. UNIT and completing the instrument**

- Insert the new OPTION UNIV. SIGN. UNIT into the instrument in the reverse order.
- Complete the instrument without causing damage to the cables.
- Connect the instrument to the mains and switch on.

**Automatic module data adjustment**

- During startup observe the display.
- When three BEEPs can be heard, press the *MENU SELECT* key.
  The version manager is started (see also chapter 4, *Firmware update*). The display includes the menu item *FIRMWARE UPDATE AFTER BOARD CHANGE*.
- Press the softkey to the left of the above mentioned menu item.
  The automatic module data adjustment is performed under software control, firmware updates for microprocessors and programmable devices being performed as well. This may take a few minutes.

After the adjustment has been terminated, the operating software starts automatically and the CMU is ready for use and complies with the specifications.

# Replacing the MODULES: DSP MODULE0/1, IQOUT MODULE, OPTION SPEECH CODEC CMU-B52 (INCLUDES DSP MODULE3) in the UNIV. SIGN. UNIT

(see chapter 5, *spare part list, Current No. 740 (DSP MODULE0), 741 (DSP MODULE1), 760 (SPEECH CODEC), 765 (DSP MODULE3), 750 (I/Q OUT MODULES)* and *explosion drawing 1100.5216.01 D sheet 2*)

The sandwich modules DSP MODULE0, DSP MODULE1, IQOUT MODULE and OPTION SPEECH CODEC CMU-B52 (includes DSP MODULE3) are installed in the UNIV. SIGN. UNIT as plug-in modules. For replacement proceed as follows:

**Opening the instrument and removing the modules**

- Switch off the instrument, pull the mains plug and unscrew the rear-panel feet.
- Place the instrument onto the front carrying handles, push the tube upwards and take off.
- After unscrewing the two countersunk screws at the top left instrument frame slightly lift the cover at the top of the instrument, slightly shift towards the right and lift off.
- Take out the module using the two levers on the right and left.
- Take off the cover on the higher side (B-side) by loosening the cover screws.
- Carefully lever out the respective sandwich module (using a pull-out tool*) (see chapter 5, *drawing 1100.5216.01 D sheet 2*).

**Installing the new sandwich module and completing the instrument**

- Replace by new module.

**Caution!**

*Take care to insert the respective module (DSP MODULE0 and DSP MODULE1 modules are of the same design) with the correct polarity (see chapter 5, drawing 1100.5216.01 sheet 2).*

- Replace the cover and fasten with screws.
- Insert the Option UNIV. SIGN. UNIT into the instrument in the reverse order.
- Complete the instrument without causing damage to the cables.
- Connect the instrument to the mains and switch on.

* available in CMU-Service Kit CMU-Z3 (1100.7690.02)

**Automatic module data adjustment**

- During startup observe the display.
- When three BEEPs can be heard, press the *MENU SELECT* key.
  The version manager is started (see also chapter 4, *Firmware update*). The display includes the menu item *FIRMWARE UPDATE AFTER BOARD CHANGE*.
- Press the softkey to the left of the above mentioned menu item.
  The automatic module data adjustment is performed under software control, firmware updates for microprocessors and programmable devices being performed as well. This may take a few minutes.

After the adjustment has been terminated, the operating software starts automatically and the CMU is ready for use and complies with the specifications.

## Replacing the Option AUDIO-GEN. + ANA. CMU-B41

(see chapter 5, *spare part list, Current No. 755 and 756* and *explosion drawing 1100.0008.01 D sheet 2*)

The Option AUDIO-GEN. + ANA. is installed at the front right top of the CMU as plug-in module in the cage. For replacement proceed as follows:

**Opening the instrument and removing the Option AUDIO-GEN. + ANA.**

- Switch off the instrument, pull the mains plug and unscrew the rear-panel feet.
- Place the instrument onto the front carrying handles, push the tube upwards and take off.
- Unscrew the combi screw from the locking bracket of the module in the vicinity of the instrument fan and fold up.
- Pull off all MMCX plug-in cables (using a pull-out tool*) from the top of the Option AUDIO-GEN. + ANA. and pull out the module towards the top with the help of the locking bracket.

**Installing the new Option AUDIO-GEN. + ANA. and completing the instrument**

- Insert the new Option AUDIO-GEN. + ANA. in the instrument in the reverse order and connect all MMCX plug-in cables.
- Complete the instrument without causing damage to the cables.
- Connect the instrument to the mains and switch on.

**Automatic module data adjustment**

- During startup observe the display.
- When three BEEPs can be heard, press the *MENU SELECT* key.
  The version manager is started (see also chapter 4, *Firmware update*). The display includes the menu item *FIRMWARE UPDATE AFTER BOARD CHANGE*.
- Press the softkey to the left of the above mentioned menu item.
  The automatic module data adjustment is performed under software control, firmware updates for microprocessors and programmable devices being performed as well. This may take a few minutes.

After the adjustment has been terminated, the operating software starts automatically and the CMU is ready for use and complies with the specifications.

* available in CMU-Service Kit CMU-Z3 (1100.7690.02)

## Replacing the POWER SUPPLY

*(see chapter 5, spare part list, Current No. 670 and explosion drawing 1100.0008.01 D sheet 2)*

The POWER SUPPLY is fitted at the rear of the instrument frame of the CMU. For replacement proceed as follows:

**Removing the POWER SUPPLY**

- Switch off the instrument and pull the mains plug.
- Unscrew the ten screws at the rear of the POWER SUPPLY. Pull out the power supply approx. 10 mm to 20 mm towards the rear, slightly tilt towards the bottom and then pull out completely.

**Installing the new POWER SUPPLY**

- Install the new POWER SUPPLY in the reverse order.

  ***Note:*** *Make sure that the 96-pin connector to the MOTHERBOARD1 locks in place correctly.*
- Connect the instrument to the mains and switch on.

## Replacing the Instrument Fan

*(see chapter 5, spare part list, Current No. 80, and explosion drawing 1100.0008.01 D sheet 2)*

The fan is fitted at the right side panel of the CMU in an air duct. For replacement proceed as follows:

**Opening the instrument and removing the fan**

- Switch off the instrument, pull the mains plug and unscrew the rear-panel feet.
- Place the instrument onto the front carrying handles, push the tube upwards and take off.
- Place the instrument onto the left side and locate the fan connecting cable. Coming from the air duct, the cable leads to connector X211 at MOTHERBOARD1 near the Option OCXO REFERENCE OSC.. If this is installed, it can as well be removed in order to enable easier access to the fan connector (see replacing the OPTION OCXO REFERENCE OSC.).
- Pull off the connector from MOTHERBOARD1. To this end, press the locking lever at the top of the connector towards the connector and lift off the cable.
- Lever off the cover of the air duct and unscrew the four countersunk screws of the fan in the right side panel of the CMU. Carefully take out the fan towards the top and pull the connecting cable through the hole in the air duct (Take off the adhesive tapes of the cable entry and keep them for later).

**Installing the new fan and completing the instrument**

- Replace the new fan in the reverse order.

  ***Note:*** *Make sure that the air direction of the fan is such that air is sucked in from the right side of the CMU and pressed through the air duct. Note the arrows on the fan casing.*
- Reconnect the fan connecting cable to MOTHERBOARD1 (Fix again the adhesive tapes of the cable entry).
- Complete the instrument without causing damage to the cables.
- Connect the instrument to the mains and switch on.

## Replacing the MOTHERBOARD

*(see chapter 5, spare part list, Current No. 620 (MOTHERBOARD1), Current No. 630 (MOTHERBOARD2), Current No. 660 (FRONTPANEL BOARD), Current No. 640 (REARPANEL BOARD1), Current No. 650 (REARPANEL BOARD2) and explosion drawing 1100.0008.01 D)*

The MOTHERBOARD consists of five parts: MOTHERBOARD1, MOTHERBOARD2, FRONTPANEL BOARD, REARPANEL BOARD1 and REARPANEL BOARD2.
For replacement of the individual parts proceed as follows:

### MOTHERBOARD1 (big MOTHERBOARD)

#### Opening the instrument and removing MOTHERBOARD1

- Switch off the instrument, pull the mains plug and unscrew the rear-panel feet.
- Place the instrument onto the front carrying handles, push the tube upwards and take off.
- After unscrewing the two countersunk screws at the top left instrument frame slightly lift the cover at the top of the instrument, slightly shift towards the right and lift off.
- Loosen all connecting cables to the boards, then lever out all boards as described above using the two levers at the right and at the left.
- Likewise, remove the POWER SUPPLY and the FRONT MODULE, disconnect the ribbon cable connections to the RF-FRONTEND, MOTHERBOARD2, FRONTPANEL BOARD, REARPANEL BOARD1 and REARPANEL BOARD2. Disconnect the fan connecting cable and remove the Option OCXO REFERENCE OSC, if installed.
- Remove the partition inserted between air duct and module support as reinforcement by unscrewing the four screws.
- Place the instrument upside down and unscrew all the five combi screws on MOTHERBOARD1, then slightly shift MOTHERBOARD1 towards the rear until the six motherboard supports slide out of the keyholes. Then swing out MOTHERBOARD1 towards the top.

#### Installing the new MOTHERBOARD1 and completing the instrument

- Insert new MOTHERBOARD1 and connect all connectors and modules in the reverse order.
- Complete the instrument without causing damage to the cables.
- Connect the instrument to the mains and switch on.

## MOTHERBOARD2 (small MOTHERBOARD)

### Opening the instrument and removing MOTHERBOARD2

- Switch off the instrument and pull the mains plug and unscrew the rear-panel feet.
- Place the instrument onto the front carrying handles, push the tube upwards and take off.
- Unscrew the combi screw of the module locking bracket near the instrument fan and swing away the locking bracket towards the top.
- Disconnect all the MMCX plug-in cables (using a pull-out tool*) from the top of the REFERENCE BOARD and pull off the module.
- If installed, remove any other optional module next to the REFERENCE BOARD.
- Disconnect the two ribbon cables from the MOTHERBOARD2. Unscrew the four screws from MOTHERBOARD2 and take out.

### Installing the new MOTHERBOARD2 and completing the instrument

- Replace new MOTHERBOARD2, fasten with screws and connect all connectors and modules in the reverse order.
- Complete the instrument without causing damage to the cables.
- Connect the instrument to the mains and switch on.

## FRONTPANEL BOARD (at the front of the instrument frame)

### Opening the instrument and removing the FRONTPANEL BOARD

- Switch off the instrument and pull the mains plug and unscrew the rear-panel feet.
- Place the instrument onto the front carrying handles, push the tube upwards and take off.
- Remove the FRONT MODULE as described above.
- Unscrew the four countersunk screws of part of the mounting plate in the front frame at the bottom and the top, loosen the two ribbon cables from MOTHERBOARD1 and the MMCX coax cables (using a pull-out tool*) on the option (if installed) next to the REFERENCE BOARD.
- Loosen all interface screws on part of the mounting plate and take out the FRONTPANELBOARD.

### Installing the new FRONTPANEL BOARD and completing the instrument

- Install new FRONTPANEL BOARD, fasten with screws and connect all connectors and modules in the reverse order.
- Complete the instrument without causing damage to the cables.
- Connect the instrument to the mains and switch on.

* available in CMU-Service Kit CMU-Z3 (1100.7690.02)

## REARPANEL BOARD1 (Interface board for Standard Connectors at the Rear of the Instrument Frame)

### Opening the instrument and removing the REARPANEL BOARD1

- Switch off the instrument and pull the mains plug and unscrew the rear-panel feet.
- Place the instrument onto the front carrying handles, push the tube upwards and take off.
- Place the instrument onto the left side.
- Pull off the two ribbon cables of the REARPANEL BOARD1 on MOTHERBOARD1.
- Loosen all interface screws on the integrated rear panel below the POWER SUPPLY and take out the REARPANEL BOARD1.

### Installing the new REARPANEL BOARD1 and completing the instrument

- Install new REARPANEL BOARD1, fasten with screws and connect all connectors in the reverse order.
- Complete the instrument without causing damage to the cables.
- Connect the instrument to the mains and switch on.

## REARPANEL BOARD2 (Interface Board for Further Connectors at the Rear of the Instrument Frame)

### Opening the Instrument and removing the REARPANEL BOARD2

- Switch off the instrument and pull the mains plug and unscrew the rear-panel feet.
- Place the instrument onto the front carrying handles, push the tube upwards and take off.
- Slightly lift the cover at the top of the instrument after unscrewing the two countersunk screws on the left, slightly shift to the right and lift off.
- Place the instrument onto the left side.
- Disconnect the two ribbon cables of the REARPANEL BOARD2 from MOTHERBOARD1.
- Unscrew the 6 combi screws of the rear-panel cover and disconnect all coax cables of the BNC connectors at the respective modules. Disconnect any option connectors mounted on the integrated rear panel. Pull the rear panel towards the rear.
- Loosen all interface screws to the REARPANEL BOARD2 on the integrated rear panel and take out REARPANEL BOARD2.

### Installing the new REARPANEL BOARD2 and completing the instrument

- Install new REARPANEL BOARD2, fasten with screws and connect all connectors in the reverse order.
- Complete the instrument without causing damage to the cables.
- Connect the instrument to the mains and switch on.

# Troubleshooting

Faulty functions may sometimes originate in simple causes, but sometimes they also result from faulty components.

These troubleshooting instructions permit to trace the fault down to module level and make the instrument ready for use again by means of module adjustment.

For the module adjustment and further error elimination, we recommend to send the instrument to our authorized service (see list of addresses, *preface*).

**Warning!**

*Live modules must not be removed or plugged in!*

*Do not produce short-circuits when measuring voltages!*

**For simple troubleshooting, the CMU provides the following tools:**

- Nine green LEDs (H1 to H8) at the bottom of MOTHERBOARD1, which indicate the operating voltages.
- A SELFTEST and INFO menu, which presents voltages via the module-internal diagnosis and RF loop-measurements with internal RF generator and RF analyzer.
- ERROR messages on the LCD display with references to sources of error.

***Note:*** *In the case of problems first check all connections for damage (cables, plug-and-socket connections etc.) or wrong positions.*

For advanced troubleshooting on board-level, see Service Manual Modules (1100.4903.94-01).

# Troubleshooting using the LEDs (H1 to H8) on the MOTHERBOARD

- **Fault: CMU cannot be switched on.**

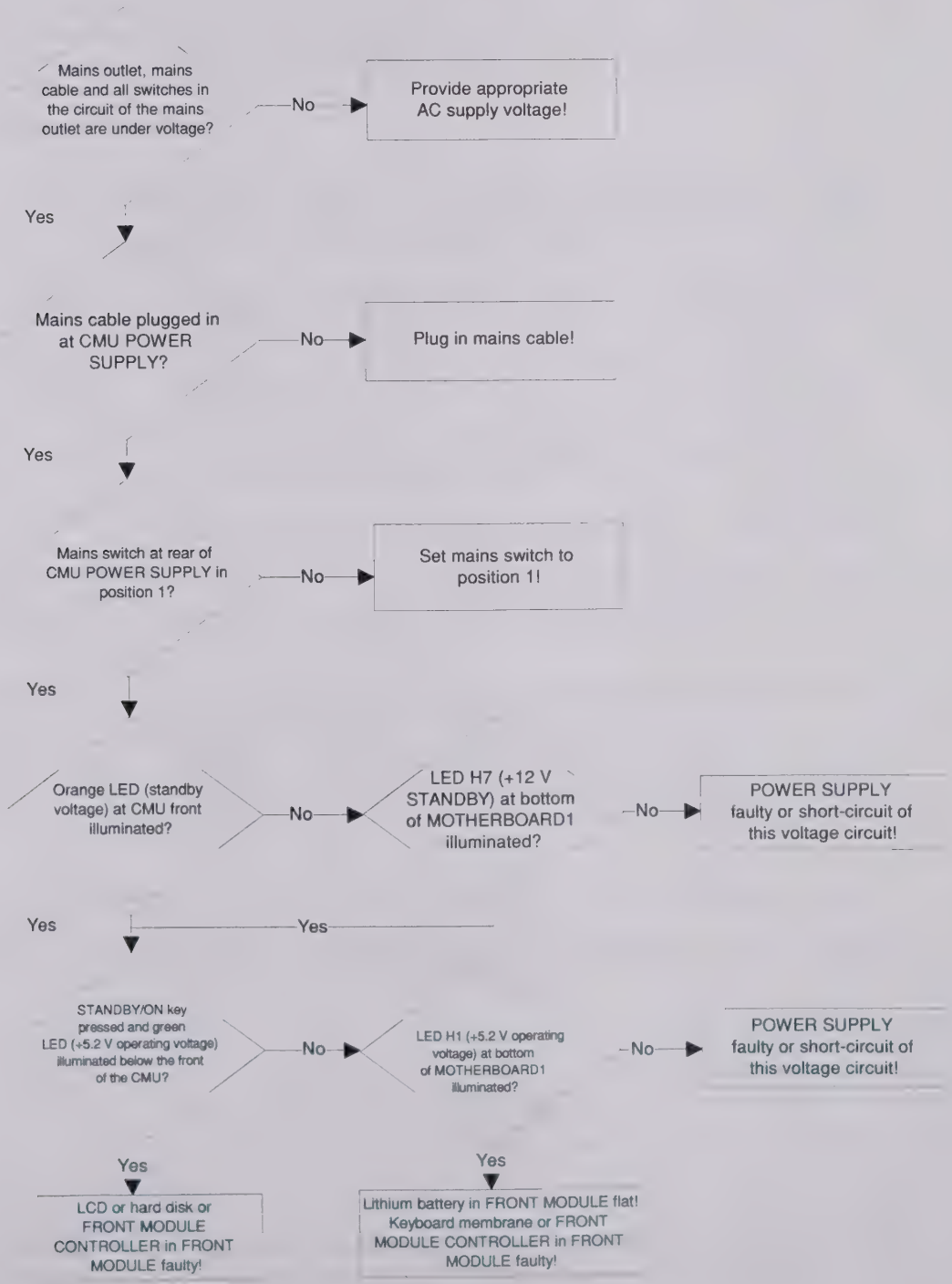

- **Fault: Short-circuit of one or several operating voltages**

➢ Check LEDs (H1 to H8) at the bottom of MOTHERBOARD1 to determine which voltage is short-circuited.

***Note:*** *In the case of a short-circuit, the power supply switches off all voltages after a short period of time.*
*Restart is possible using the ON/STANDBY key.*

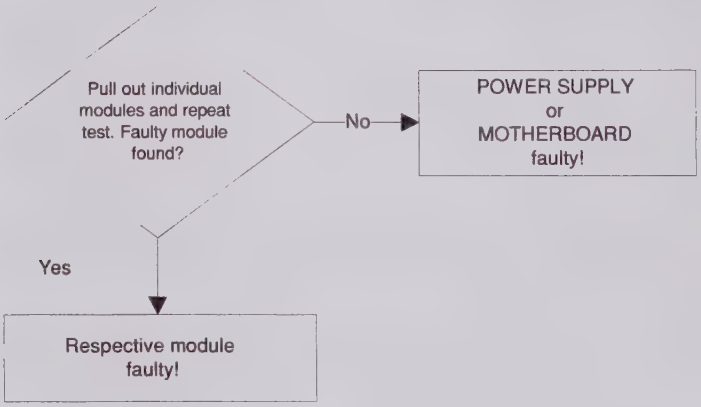


- **Fault: Instrument fan does not work.**

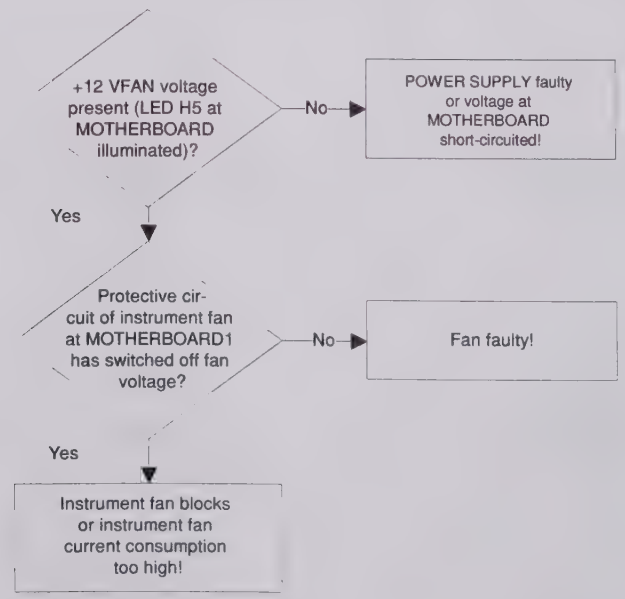


***Note:*** *Measure instrument fan voltage at connector X 211! By pressing the STANDBY/ON key again, the protective circuit of the instrument fan can be restarted.*

## Troubleshooting using the SELFTEST Menu for Modules

The SELFTEST menu indicate the diagnostic voltages for the individual modules of which the modules settings are exactly defined. Thus, a specific selftest of the respective module is possible.
This menu additionally features internal RF power measurements which are designed as RF loop with internal generator and analyzer. This is why a simple RF path is possible.

The selftest menu can be called up via the *MENU SELECT* key on the front panel of the CMU.
Call the selection BASE via the spinwheel in the *MENU SELECT* and confirm with ENTER.
The respective selftest can be selected via the softkey *SELECT* and the spinwheel.

The following selftests are available:

- Continuous Selftest (Continous selftest via System Selftest and Internal RF Loop Selftest, passed/failed with error output is only indicated; additionally in case of errors, it is created an error file 'cst.err'*)
- Internal RF Loop Selftest (Selftest RF path by power measurements via internal generator and analyzer, in this case all measured values are indicated.)
- System Selftest (Selftest instrument for diagnostic voltages, passed/failed with error output is only indicated.)
- FE Selftest (Selftest Module RF FRONTEND for diagnostic voltages, in this case all measured values are indicated.)
- REF Selftest (Selftest Module REFERENCE BOARD for diagnostic voltages, in this case all measured values are indicated.)
- DIG Selftest (Selftest Module DIGITAL BOARD for diagnostic voltages, in this case all measured values are indicated.)
- RXTX1 Selftest (Selftest Module RXTX1 BOARD for diagnostic voltages, in this case all measured values are indicated.)
- 1→4/3→2 RF Loop Selftest RF Path RF1→RF4IN and RF3OUT→RF2 via external N-coax cable by power measurements via internal generator and analyser, in this case all measured values are indicated.

After having selected and confirming with the ENTER key, the test can be started by selecting the TEST softkey and the ON key.
Pressing the REPORT softkey and turning the spinwheel the indicated page can be pulled up and down.
If errors (red color) are produced by this test, the error will be found out and elimated on the respective module.

---

* ***Note:*** *You can read the error file 'cst.err' as follows:*
- *Connect the external keyboard connector to the rear panel of the CMU.*
- *Switch on the CMU and wait until the CMU is booted.*
- *Start the Continuous Selftest (only when errors have occurred, the file 'cst.err' is created. Don't finish the Continuous Selftest with OFF, otherwise the 'cst.err' file will be deleted.)*
- *Press the keys ALT and F4 of the external keyboard to get to the DOS mode.*
- *Read the file with the DOS editor: 'edit cst.err'*
- *Quit the DOS editor and start CMU operating software with: 'cmu.bat'*

## Troubleshooting using the INFO Menu for Modules

The INFO menu can be called up via the *INFO* key on the front panel of the CMU from each measurement application of the CMU. Thus, it is possible to get diagnostic voltages, when the measurement application on the respective module is exactly selected, e.g. to determine whether a PLL has locked in.
The respective module state can be selected via the softkey *SELECT* and the spinwheel.

The following info menus are available:

- FE State (State test MODULE RF FRONTEND for diagnostic voltages, in this case all measured values are indicated.)
- REF State (State test MODULE REFERENCE BOARD for diagnostic voltages, in this case all measured values are indicated.)
- DIG State (State test MODULE DIGITAL BOARD for diagnostic voltages, in this case all measured values are indicated.)
- RXTX1 State (State test RXTX1 BOARD for diagnostic voltages, in this case all measured values are indicated.)

After having selected and confirming with the *ENTER* key, the test can be started by selecting the *TEST* softkey and the *ON* key.
Pressing the *REPORT* softkey and turning the spinwheel the indicated page can be pulled up and down.

*Note: Diagnostic voltages which are called up by the INFO key, are partly depending on the active measurement application. Which is why some voltages may be out of tolerance (red color), when this function is not used by the selected application.*

**If the fault is not clear, it is useful to call up the SELFTEST Menu and check all diagnostic voltages of the modules to determine whether there are discernible deviations.**
**This knowledge then enables a specific module replacement in order to eliminate the error.**

- **Example: Info menu REFERENCE BOARD**

**Fault: The frequency accuracy of the RF signal deviates.**

Call the Maintenance Menu via the *INFO* Key select REFERENCE BOARD, start the diagnosis measurement using the *TEST* Key and activate the *ON* hardkey.

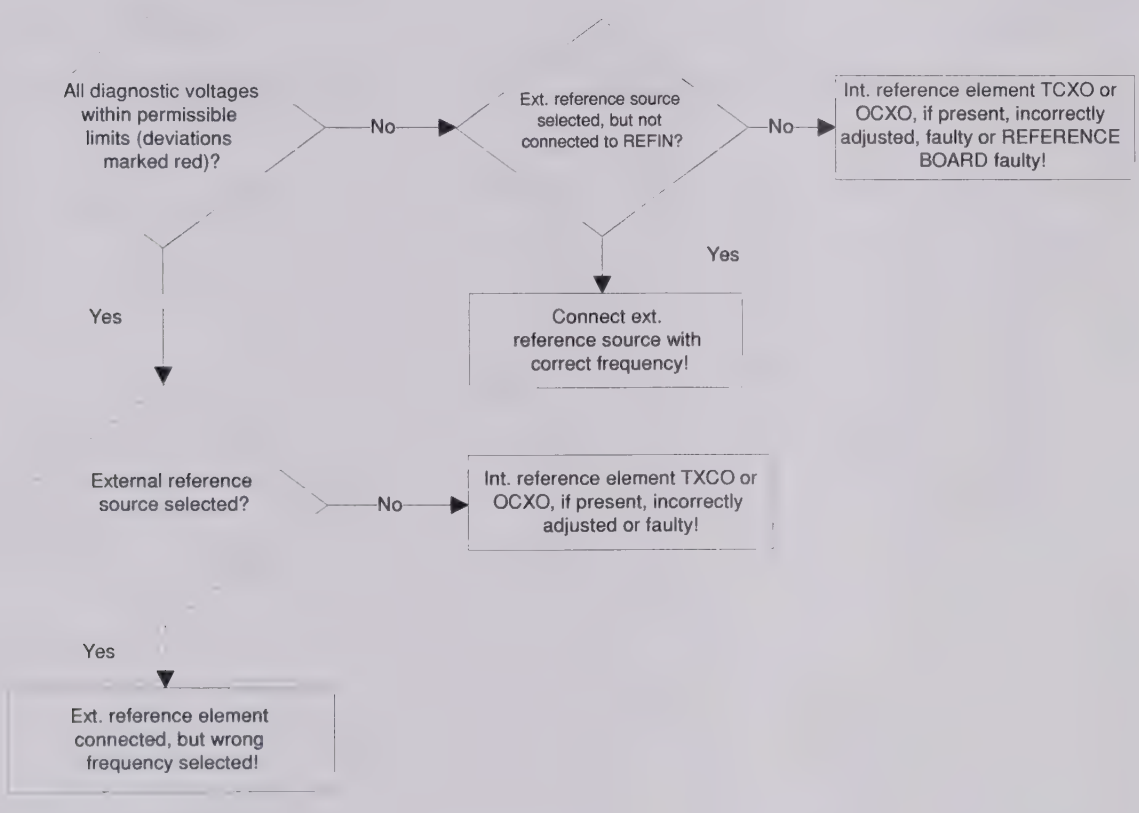

## Troubleshooting using the ERROR messages on the LC display

| Error message | Error description | Troubleshooting to |
|---|---|---|
| These clocks are not present:<br>NET_CLOCK_1<br>NET_CLOCK_2 | Netclock 1 / 2 not present | REFERENCE BOARD,<br>DIGITAL BOARD,<br>MMCX cable W31/W32 |
| These clocks are not present:<br>FIXED_CLOCK | 110.8MHz Reference clock not present | REFERENCE BOARD,<br>DIGITAL BOARD,<br>MMCX cable W33 |
| DIG diag adc cal error | Calibration error of the diagnosis AC/DC converter | DIGITAL BOARD |
| FE pow adc cal error | Calibration error of the power meter AC/DC converter | RF FRONTEND |
| FE eprom data error<br>FE pow meter data error | General eprom data error<br>Eprom power meter data error | RF FRONTEND<br>RF FRONTEND |
| timeout in 331 handshake | Communication error correction processor | TR-CORRECTION MODULE on RXTX BOARD |

# More troubleshooting

## General errors on the transmitter side of the CMU

| Error description | Troubleshooting to |
|---|---|
| Setting frequency in the module test faulty | REFERENCE BOARD<br>MMCX cable W12<br>RXTX BOARD1<br>TR-CORRECTION MODULE1<br>MMCX cable W17<br>AUC MODULE1<br>TX DSP MODULE1 |
| Setting frequency in the signalling test faulty | UNIV. SIGN. UNIT<br>DIGITAL BOARD |
| Setting level in the module test faulty | RF FRONTEND<br>SMA-cable W13<br>RXTX BOARD1<br>TR-CORRECTION MODULE1<br>MMCX cable W17<br>AUC MODULE1<br>TX DSP MODULE1 |
| Setting level in the signalling test faulty | UNIV. SIGN. UNIT<br>DIGITAL BOARD |
| Modulation in the module test faulty | DIGITAL BOARD<br>AUC MODULE1<br>TX DSP MODULE1 |
| Modulation in the signalling test faulty | DIGITAL BOARD<br>AUC MODULE 1<br>UNIV. SIGN. UNIT |

## General errors on the receiver side of the CMU

| Error description | Troubleshooting to |
|---|---|
| Received frequency in the module test faulty | REFERENCE BOARD<br>MMCX cable W12<br>RXTX BOARD1<br>TR-CORRECTION MODULE1<br>MMCX cable W19<br>ADC MODULE1<br>DDC MODULE1 |
| Received frequency in the signalling test faulty | UNIV. SIGN. UNIT<br>DIGITAL BOARD |
| Received level in the module test faulty | RF FRONTEND<br>SMA-cable W14<br>RXTX BOARD1<br>TR-CORRECTION MODULE1<br>MMCX cable W19<br>ADC MODULE1<br>DDC MODULE1 |
| Received level in the signalling test faulty | RF FRONTEND<br>SMA-cable W14<br>RXTX BOARD1<br>TR-CORRECTION MODULE1<br>MMCX cable W19<br>ADC MODULE1<br>DDC MODULE1<br>UNIV.SIGN. UNIT |
| Trigger releases no measurement<br>RF POWER<br><br>IF POWER | <br>RF FRONTEND<br>DIGITAL BOARD<br>DDC-MODULE1<br><br>RXTX BOARD1<br>DIGITAL BOARD<br>DDC-MODULE1 |

# 4 Software Update/Installing Options

This chapter contains information on extension and modification of the CMU. Additional manuals obtained together with a software/firmware update or with subsequently acquired options can be filed here.

## New Installation of the CMU Software

A software update can be performed in the CMU using the PCMCIA INTERFACE or the FLOPPY DISK DRIVE (CMU-U61).

One of these is always installed in the CMU (compulsory option).

The software update is carried out in the CMU using the **VersionManager**. This tool enables convenient installation, deletion and activation of different software versions. It also permits to perform a firmware update of modules following module replacement (see chapter 2, *Automatic Adjustment).*

The CMU is always supplied with the latest software version including the version manager.

***Note:*** *The newest CMU software is also available at the R&S Lotus Notes Service Board.*

### Software Update via PCMCIA INTERFACE

For the PCMCIA INTERFACE, two drive slots are provided. Both drive slots can be used for the software update. An installation medium is automatically searched for. The flash disks type and the hard disk (type 3) feature a small groove on one side; the disks are to be inserted into the drive slot with the groove pointing upwards.

***Note:*** *The drive designation is as follows: right drive slot (slot 0) is drive D: left drive slot (slot 1) is drive E:. Hard disk can only be inserted into the right drive slot (Slot 0; drive D:).*

To perform the software update, the instrument must be switched off, then the software update flash disk or hard disk must be inserted into the PCMCIA INTERFACE on the instrument and the instrument switch on.
Then the further update flash disks (if necessary) must be inserted one after the other. Please follow the hints in the **VersionManager**.

### Software Update via FLOPPY DISK DRIVE

To perform the software update, the instrument must be switched off, then the first software update floppy ('3.5') must be inserted into the FLOPPY DISK DRIVE of the instrument and the instrument switched on.
Then the further update floppies must be inserted one after the other. Please follow the hints in the **VersionManager**.

## Performing a Software Update

On start-up, an automatic test is made to check whether an update floppy disk or a flash disk/hard disk is available. If this is the case, the version manager is started, displaying the following possible selections:

VersionManager Ver X.X

The active CMU software is the version: [active version]

◀— activate other software version

◀— delete a software version

◀— install software version from FLOPPY DISK DRIVE or PCMCIA Slot X

◀— firmware update after board change

◀— edit service tables

◀— exit

In the above menu, an action can be selected using the softkey located to the left of the arrow.

- For the software update select the action *install new software version* from the Floppy DISK DRIVE or the PCMCIA Slot X.
- Press the softkey to the left of the above mentioned menu item. An overview of the software versions that already provided on the installation media will appear.
- Select the desired version by pressing the softkey to the left of the arrow.

  The software update will then start automatically, prompting the user to insert a further update floppy disk or flash disk, if necessary. Confirm using the ENTER hardkey.

***Note:*** *In the case of several update floppy disks or flash disks always observe the order of the disk numbers.*

- When all update floppy disks or flash disks have been loaded, follow the prompt

  *Remove installation media and press ENTER key*

The CMU boots again and automatically performs a firmware update of the hardware boards. This may take a few minutes. Then the new software version will start and the CMU is ready for use.

## Reinstalling the Old Software

As described above, each software version, even older versions, can be simply loaded from a appropriate floppy disk or flash disk/hard disk using the version manager. It is also possible to keep several software versions stored on the hard disk in the CMU and reload them, if required, using the version manager. To this end, proceed as follows:

- During start-up observe the display.
- When three BEEPs can be heard, press the *MENU SELECT* key.

  The version manager is now started (see also chapter 4, *Software Update*). The display includes the menu item *activate other software version.*
- Press the softkey to the left of the above mentioned menu item.

  An overview of the software versions that are already provided in the CMU will appear.
- Select the desired version by pressing the softkey to the left of the arrow.

The selected software version is loaded. After the firmware update of the hardware boards has been terminated, the operating software starts automatically and the CMU is ready for use and can be operated as usual.

## Loading Software as long as there is no VersionManager in the CMU

In case of unintentional deletion of the version manager, new loading of the version manager is necessary.

For this purpose, a software update floppy disk or flash disk type 2 / hard disk (type 3) and an external keyboard to be plugged in at the rear panel of the CMU at the KEYBOARD connector are required.

- Insert software update floppy disk No. 1 or flash disk / hard disk into the respective drive, switch on the CMU and use the external keyboard to select drive a: (with floppy disk drive) or d:/e: (with flash disk/hard disk) when the DOS prompt appears.

***Note:*** *Using the hardkey combination 'Alt' and 'F4' on the external keyboard you get from the operating software into the DOS mode.*

- Change to the subdirectory of the update floppy or flash disk/hard disk (cd\...).
- Enter the command install.bat a:/d:/e: (corresponding to the respective drive) via the external keyboard.
- Confirm using the ENTER hardkey.

The version manager will be loaded and a software update can then be performed as described above.

## Installing the Options

The following options are available with the CMU:

| | | |
|---|---|---|
| Option OCXO REFERENCE OSC. $2*10^{-7}$ Aging/year | CMU-B11 | 1110.5000.02 |
| Option OCXO REFERENCE OSC. $3.5*10^{-8}$ Aging/year | CMU-B12 | 1110.5100.02 |
| Option ADDITIONAL RF/IF CONNECTORS | CMU-B15 | 1110.6006.02 |
| Option UNIVERSAL SIGNALLING UNIT | CMU-B21 | 1100.5200.02 |
| Option AUDIO-GEN. + ANA. | CMU-B41 | 1100.5300.02 |
| Option SPEECH CODEC for CMU-B21 | CMU-B52 | 1110.5400.02 |
| Bluetooth for CMU | CMU-B53 | 1100.5700.02 |
| Option FLOPPY DISK DRIVE | CMU-U61 | 1110.5500.02 |
| Option Abis Interface Unit | CMU-B71 | 1100.6406.02 |
| Option CDMA (IS95) Signalling Unit | CMU-B81 | 1100.6506.02 |
| SW Package for network tests, see overview of CMU manuals at the beginning of this service manual | CMU-Kxx | |

Depending on the model ordered and the software configuration, the CMU comes with part of the options installed in the factory. For retrofitting, please note the mounting instructions enclosed with the options.

These mounting instructions can be filed at this place in the service manual and are thus easily available whenever they are required.

**Caution!**

*The following accessories for the rackmount are available:*

- *19'' adapter ZZA-411 (standard installation kit with bracket), Stock No. 1096.3283.00*

**All options can be installed by the user himself. No additional measuring equipment is necessary for putting into operation.**

**Caution!**

*Disconnect the instrument from the mains before opening the casing. Also note the safety instructions at the beginning of this manual.*

*The components used in the instrument are sensitive to electrostatic discharges which is why they are to be dealt with according to the ESD regulations.*

When installing hardware options note the following:

- Switch off instrument and pull the mains plug.
- Unscrew rear panel feet of the rear side (four Phillips screws, size 2).
- Place the instrument onto the front carrying handles, push the tube upwards and take off.
- After installing the option replace the tube and fasten the rear panel feet again.

**Caution!**

*When replacing the tube take care not to damage or pull off cables.*

- Switch on CMU. Install additional software, if supplied, according to the instructions (see section *New Installation of the CMU Software*) or enable the additional software functions (see *Installation instructions for the respective option).* The software will then automatically detect the installed option (option display can be called using the *SETUP* key and the item *Options*!). If an adjustment is required for this option, the appropriate hints are to be found in the installation instructions for the option.

## Option OCXO REFERENCE OSC. CMU-B11 1110.5000.02

To this end the instrument must be opened. Proceed according to the instructions enclosed with the option (see also chapter 3, *Replacing the OPTION OCXO REFERENCE OSC. CMU-B11 1100.5000.02*).

## Option OCXO REFERENCE OSC. CMU-B12 1110.5100.02

To this end the instrument must be opened. Proceed according to the instructions enclosed with the option (see also chapter 3, *Replacing the OPTION OCXO REFERENCE OSC. CMU-B12 1100.5100.02*).

## Option ADDITIONAL RF/IF CONNECTORS CMU-B15 1100.6006.02

To this end the instrument must be opened. Proceed according to the instructions enclosed with the option (see also chapter 3, *Replacing the OPTION ADDITIONAL RF/IF CONNECTORS CMU-B15 1100.6006.02*).

### Option UNIV. SIGN. UNIT CMU-B21 1100.5200.02

To this end the instrument must be opened. Proceed according to the instructions enclosed with the option (see also chapter 3, *Replacing the OPTION UNIV. SIGN. UNIT CMU-B21 1100.5200.02*).

### Option AUDIO-GEN. + ANA. CMU-B41 1100.5300.02

To this end the instrument must be opened. Proceed according to the instructions enclosed with the option (see also chapter 3, *Replacing the OPTION AUDIO-GEN. + ANA. CMU-B41 1100.5300.02*).

### Option SPEECH CODEC for CMU-B21 CMU-B52 1110.5400.02

To this end the instrument must be opened. Proceed according to the instructions enclosed with the option (see also chapter 3, *Replacing the OPTION SPEECH CODEC CMU-B52 1100.5400.02*).

### Option Bluetooth for CMU CMU-B53 1100.5700.02

To this end the instrument must be opened. Proceed according to the instructions enclosed with the option.

### Option FLOPPY DISK DRIVE CMU-U61 1110.5500.02

To this end the instrument must be opened. Proceed according to the instructions enclosed with the option (see also chapter 3, *Replacing the OPTION FLOPPY DISK DRIVE CMU-U61 1110.5500.02*).

### Option Abis Interface Unit CMU-B71 1100.6406.02

To this end the instrument must be opened. Proceed according to the instructions enclosed with the option.

### Option CDMA (IS95) Signalling Unit CMU-B81 1100.6506.02

To this end the instrument must be opened. Proceed according to the instructions enclosed with the option.

### SW Packages for various network tests CMU-Kxx

The software options do not require opening of the instrument. Proceed according to the instructions enclosed with the options.

# Installation of Option CMU-B11 OCXO REF.OSC. (1100.5000.02)

*Contents*

**1 Preparation** ..... **2**

**2 Installation of Option** ..... **3**

**3 Assembling Unit** ..... **4**

**4 Functional Test of Option CMU-B11** ..... **5**

This option may also be installed at the customer's

# 1 Preparation

1.1 Switch off unit and unplug power cable.

1.2 Screw off cabinet feet (four cross-recessed screws, size 2).

1.3 Place unit on handles at the front, push casing upwards and remove (Fig. 1).

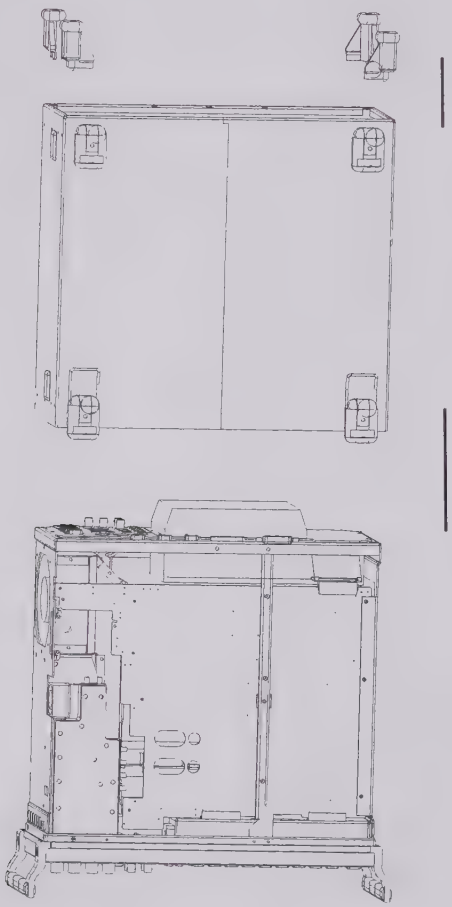

**Fig. 1**

# 2 Installation of Option

2.1 Insert OCXO REFERENCE OSC. into unit from the side until it plugs into connector X212 on motherboard 1.

2.1 Fit OCXO REFERENCE OSC. using the three supplied screw and washer assemblies (VS 0071.5040.00, see Fig. 2).

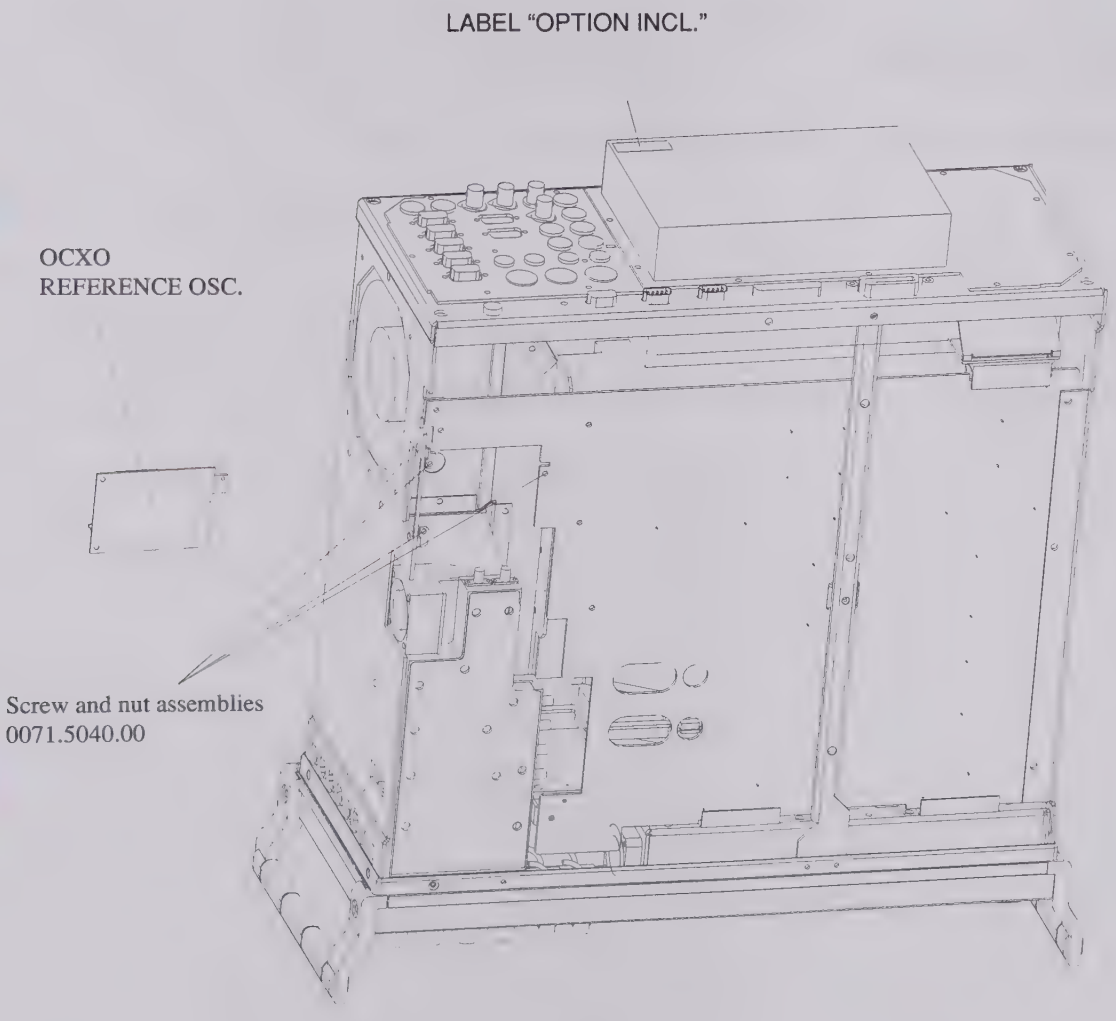


**Fig. 2**

# 3 Assembling Unit

## Affixing Option Label

➢ Affix OPTION INCL. label to power supply unit (Fig. 2).

## Putting Casing Back

➢ Fit casing and cabinet feet in the reverse order given under 1.2 / 1.3 (Fig. 1).

# 4 Functional Test of Option CMU-B11

➢ Connect unit to AC supply and switch on.

## Test of Option Detection

➢ Press SETUP hardkey SYSTEM panel.

➢ Press OPTIONS softkey located on the row of keys at bottom of display.

➢ --> Check whether option CMU-B11 is indicated and activated.

## Test of Frequency Accuracy

**Preparation:**

The measurement can be carried out at the connector REFOUT1 (rear of CMU) at 10 MHz or at the connector RF3OUT (front panel) at 1GHz with a frequency counter.

➢ Set the generator to 1 GHz and 13 dBm with no modulation for measurement at connector RF3OUT in the RF menu.

For this setting, CMU must be switched to its internal reference source.

➢ This is to be selected in the *Sync.* menu depending on the application.

***Note:*** *For fast setting, the measurement at 1 GHz can be made with reduced resolution (1 Hz).*

**Measurement:**

(Carry out the following adjustment only if required)

➢ Adjust reading on frequency counter to:
10.000 000 00 MHz –0.1/+0.05 Hz (at REFOUT1) or
1.000 000 000 GHz –10 Hz/+5 Hz (at RF3OUT) with the aid of potentiometer R5 on module OCXO REFERENCE OSC. (a tolerance of -2 to -5 Hz is required due to ageing).

***Note:*** *The CMU must be on for at least 5 minutes for the OCXO to warm up.*

# Installation of Option CMU-B12 OCXO REF.OSC. (1100.5100.02)

*Contents*

**1 Preparation** ..... **2**

**2 Installation of Option** ..... **3**

**3 Assembling Unit** ..... **4**

**4 Functional Test of Option CMU-B11** ..... **5**

This option may also be installed at the customer's

# 1 Preparation

1.1 Switch off unit and unplug power cable.

1.2 Screw off cabinet feet (four cross-recessed screws, size 2).

1.3 Place unit on handles at the front, push casing upwards and remove (Fig. 1).

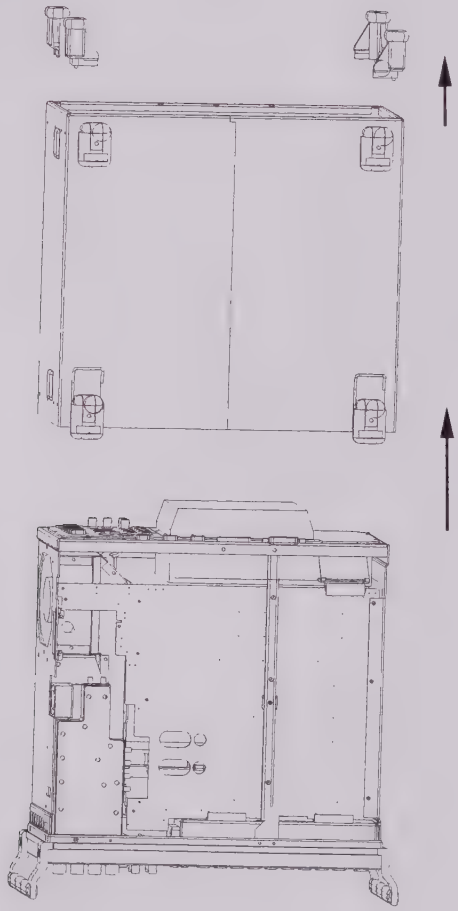

**Fig. 1**

# 2 Installation of Option

2.1 Insert OCXO REFERENCE OSC. into unit from the side until it plugs into connector X212 on motherboard 1.

2.2 Fit OCXO REFERENCE OSC. using the three supplied screw and washer assemblies (VS 0071.5040.00, see Fig. 2).

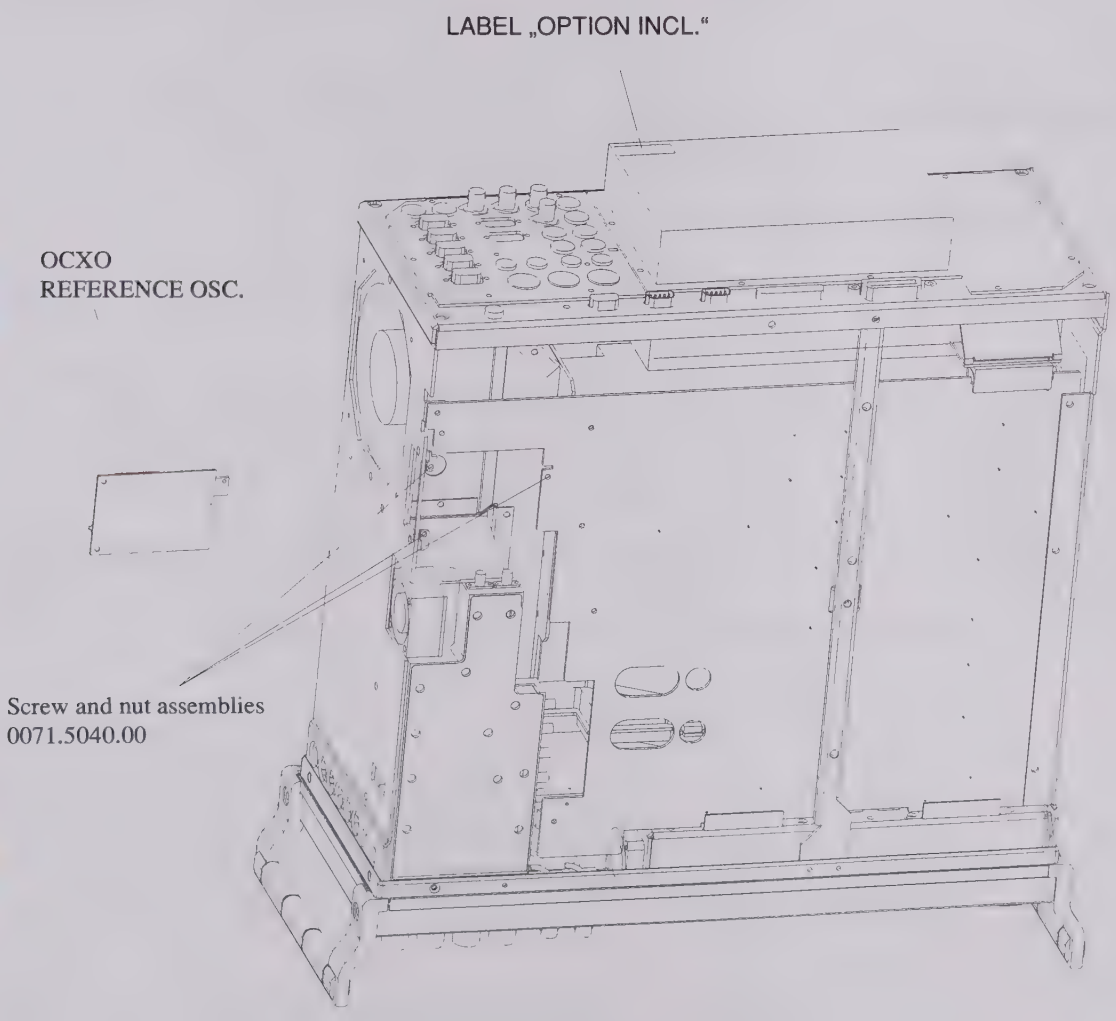


**Fig. 1**

# 3 Assembling Unit

## Affixing Option Label

➢ Affix OPTION INCL. label to power supply unit (Fig. 2).

## Putting Casing Back

➢ Fit casing and cabinet feet in the reverse order given under 1.2 / 1.3 (Fig. 1).

# 4 Functional Test of Option CMU-B12

➢ Connect Unit to AC Supply and switch on.

## Test of Option Detection

➢ Press *SETUP* hardkey SYSTEM panel.

➢ Press *OPTIONS* softkey located on the row of keys at bottom of display.

--> Check whether option CMU-B12 is indicated and activated.

## Test of Frequency Accuracy

### Preparation:

The measurement can be carried out the connector REFOUT1 (rear of CMU) at 10 MHz or at the connector RF3OUT (front panel) at 1GHz with a frequency counter

➢ Set the generator to 1 GHz and 13 dBm with no modulation for measurement at connector RF3 OUT in the RF menu.

For this setting, CMU must be switched to its internal reference source. This is to be selected in the *Sync.* menu depending on the application.

***Note:*** *For fast setting, the measurement at 1GHz can be made with reduced resolution (1Hz)*

### Measurement:

(Carry out the following adjustment only if required)

➢ Adjust reading on frequency counter to:
10.000 000 00 MHz –0.1/+0.05 Hz (at REFOUT1) or
1.000 000 000 GHz –10 Hz/+5 Hz (at RF3OUT)
with the aid of potentiometer R5 on module OCXO REFERENCE OSC. (a tolerance of –2 to –5 Hz is required due to ageing).

***Note:*** *CMU must be on for at least 10 minutes for the OCXO to warm up.*

*During the adjustment the CMU must be operated in a horizontal position.*

# Installation of Option CMU-B21 UNIV. SIGN. UNIT (1100.5200.02)

*Contents*

**1 Preparation** ..... **2**

**2 Installation of Option** ..... **4**

**3 Assembling Unit** ..... **5**

**4 Functional Test of Option CMU-B21** ..... **6**

This option may also be installed at the customer's.

# 1 Preparation

1.1 Switch off unit and unplug power cable.

1.2 Screw off cabinet feet (four cross-recessed screws, size 2).

1.3 Place unit on handles at the front, push casing upwards and remove (Fig. 1).

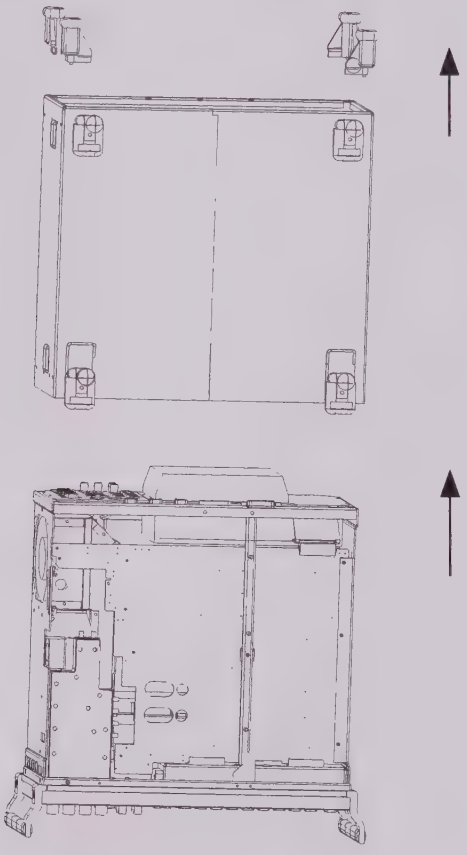

**Fig. 1**

1.4 After undoing two countersunk head screws at the top left frame, raise cover slightly, push somewhat to the right and take it off towards the top.

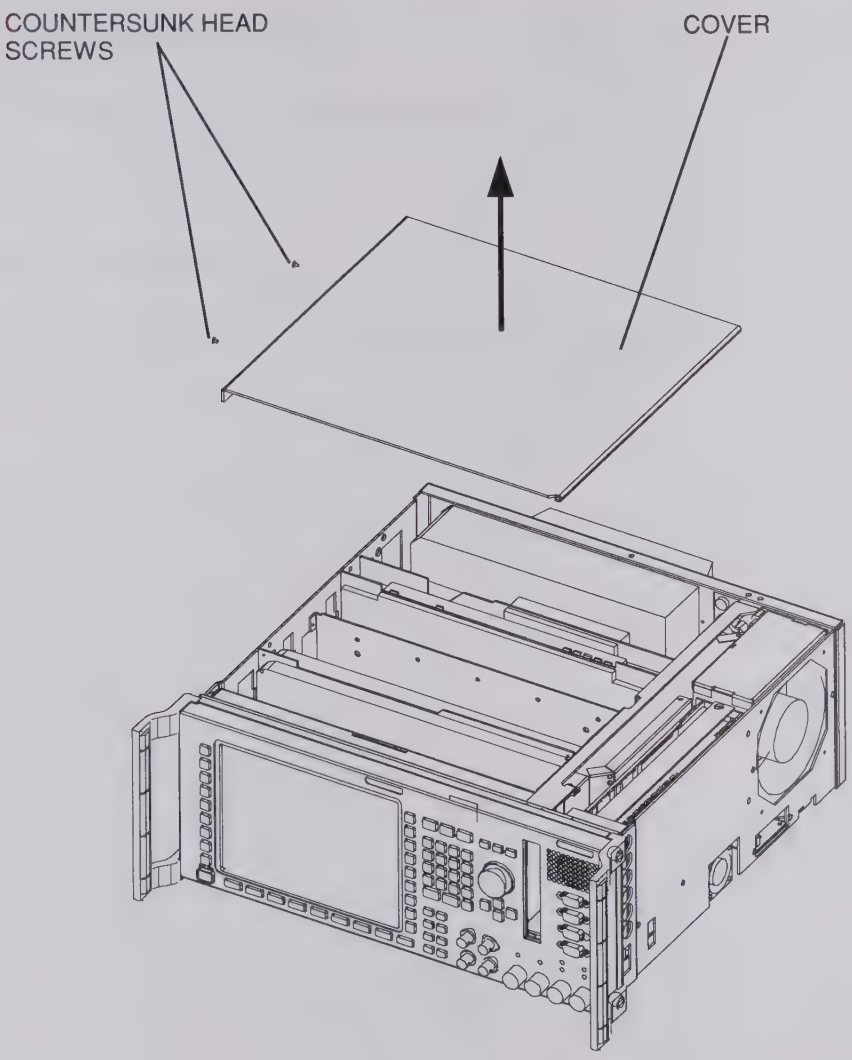


**Fig. 2**

# 2 Installation of Option

2.1 Remove cover on the vent in the intermediate panel of the 7th slot as seen from the front (Fig. 3).

2.2 Insert CMU-B21 into 7th slot as seen from the front.

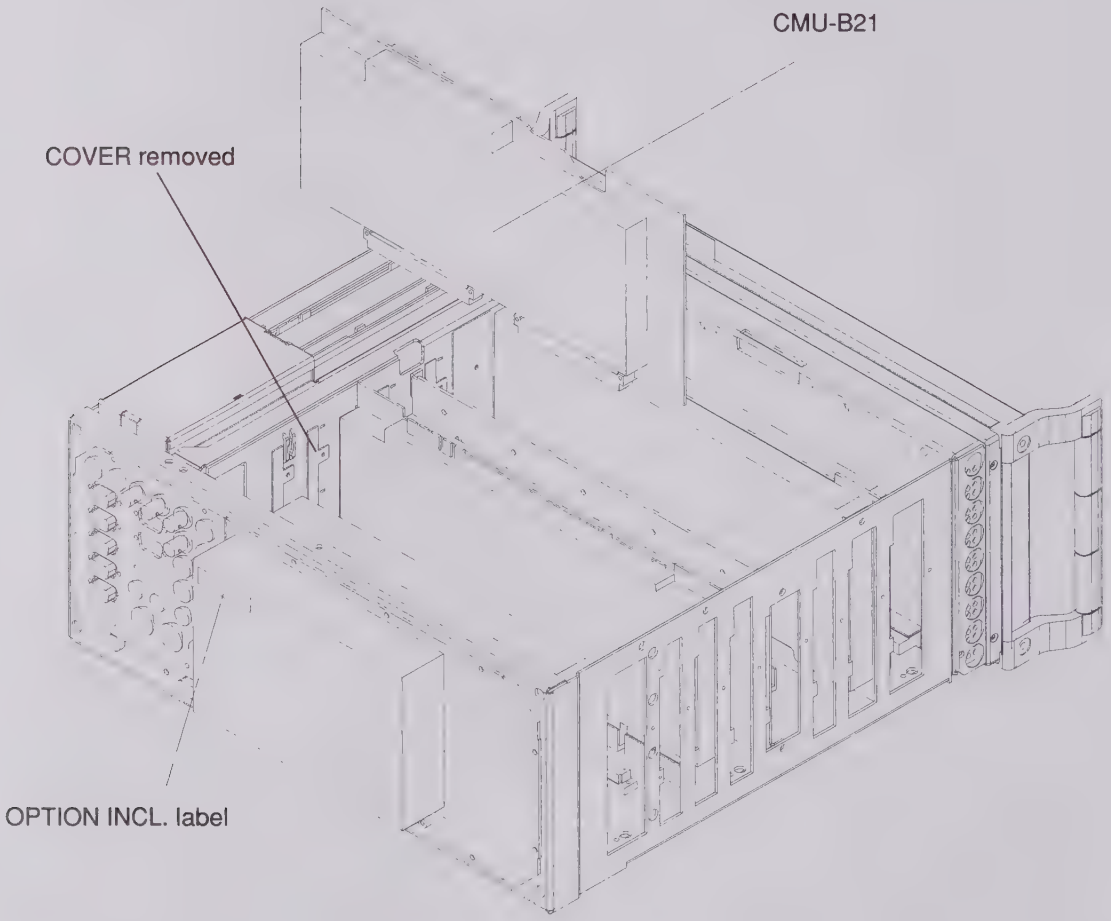


**Fig. 3**

# 3 Assembling Unit

## Affixing Option Label

➢ Affix OPTION INCL. label on power supply unit (Fig. 2).

## Putting Cover Back

➢ Fit cover and cabinet feet back on in the reverse order to that described under 1.2/1.3 (Fig. 1).

# 4 Functional Test of Option CMU-B21

➢ Connect unit to AC supply and switch on

## Automatic Module Data Adjustment

➢ During startup observe the display.

➢ When three BEEPs can be heard, press the *MENU SELECT* key.

The *VersionManager* is started (see also chapter 4, *Firmware update*). The display includes the menu item *FIRMWARE UPDATE AFTER BOARD CHANGE*.

➢ Press the softkey to the left of the above mentioned menu item.

The automatic module data adjustment is performed under software control, firmware updates for microprocessors and programmable devices being performed as well. This may take a few minutes.

After the adjustment has been terminated, the operating software starts automatically and the CMU is ready for use and complies with the specifications.

## Test of Option Detection

➢ Press *SETUP* hardkey in *SYSTEM* panel.

➢ Press *OPTIONS* softkey located on the row of keys at bottom of display.

--> Check whether CMU-B21 is active.

## Test of Function

➢ Press *MENU SELCT* hardkey on *FUNCTION* panel.

➢ Press *GSM 900* softkey on the row of keys at bottom of display.

--> Check whether the *SIGNAL ON* indication in the top right display (blue status field) is highlighted in green.

# Installation of Option CMU-B41 AUDIO-GEN.+ANA. (1100.5300.02)

*Contents*


**1 Preparation ..... 2**

**2 Installation of the Option ..... 4**

**2.1 Fitting ..... 4**

**2.1 Cabling ..... 5**

**3 Assembly of Unit ..... 6**

**3.1 Affixing Option Label ..... 6**

**3.2 Fitting Enclosure ..... 6**

**4 Functional Test of Option CMU-B41 ..... 7**

**4.1 Automatic Module Data Adjustment ..... 7**

**4.2 Checking Option Detection ..... 7**

**4.3 Checking the Function ..... 7**


This option may also be installed at the customer's.

# 1 Preparation

1.1 Switch off unit and unplug power cable.

1.2 Screw off cabinet feet (four crosss-recessed screws, size 2).

1.3 Place unit on handles at the front, push casing upwards and remove (Fig. 1).

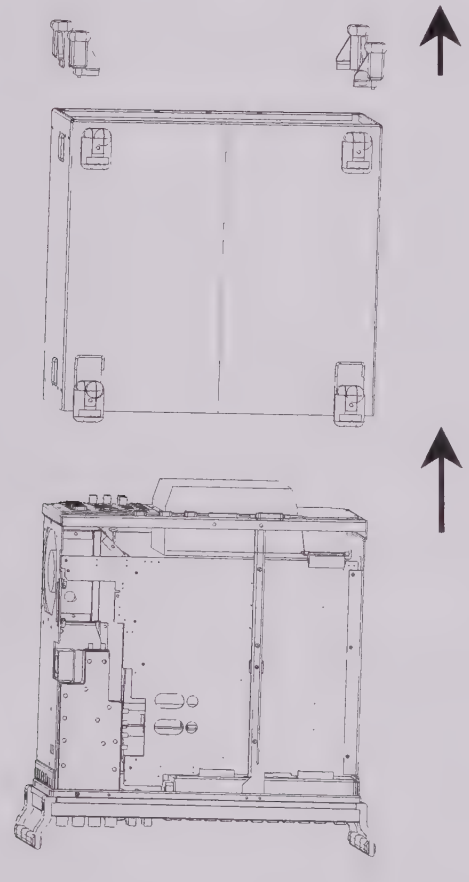

**Fig.1**

➢ After undoing two countersunk head screws at the top left frame, raise cover slightly, push somewhat to the right and take it off towards the top

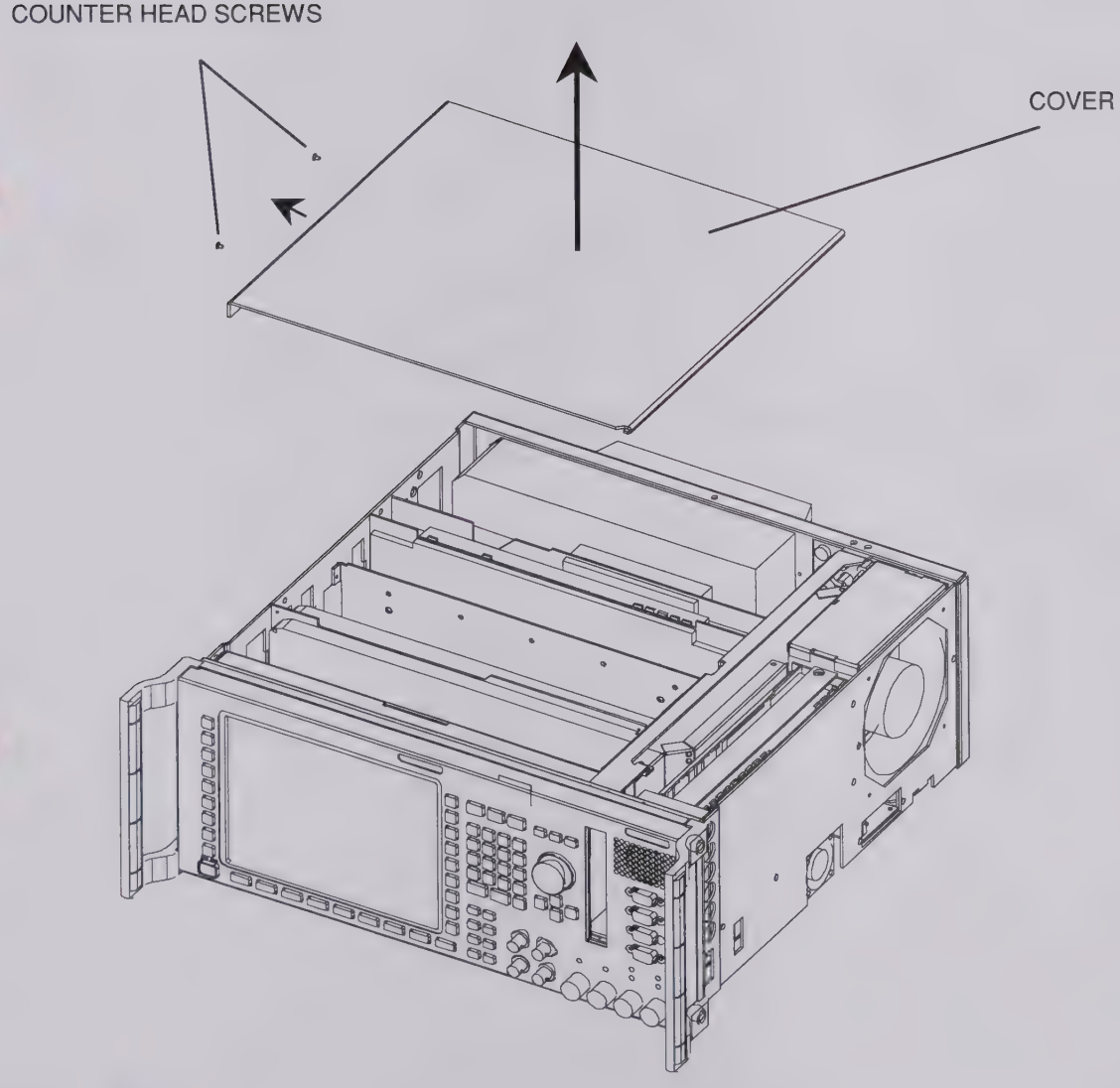


**Fig. 2**

# 2 Installation of the Option

## 2.1 Fitting

- Remove clamp. Take off vent cover between air duct and cage since it is no longer needed (Fig. 3).
- Plug module CMU-B41 into free slot at the right-hand side of unit.
- Mount clamp again (Fig. 3).

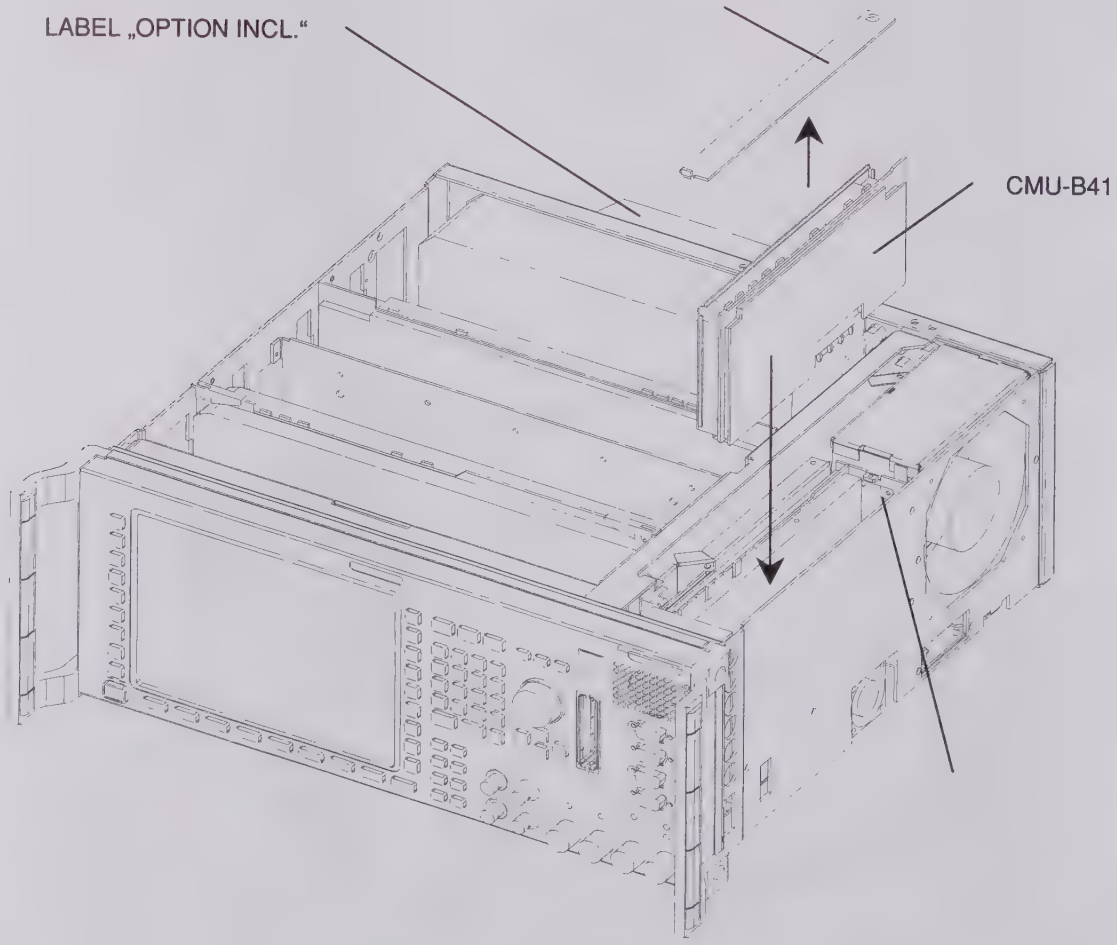


**Fig. 3**

## 2.1 Cabling

The option has the electrical designation A 11.

When installing the option CMU-B41, observe that the designations of built-in cables for batches 831593..., 829740..., 830377..., and 828942... are not complete or incorrect and so the cables have to be identified according to the following list.

| Source | | Incomplete cable designation | Connecting end |
|---|---|---|---|
| Loudspeaker | cable | A11-X | A11/X112 * |
| AF IN | cable | W 6 A11-X114 | A11/X113 * |
| AUX 1 | cable | W 8 | A11/X114 * |
| AF OUT | cable | W 5 A11-X113 | A11/X115 * |
| AUX 2 | cable | W 7 | A11/X116 * |

➢ Connect the supplied RF cable as follows:

| | | |
|---|---|---|
| RF cable W 40 | 1st end | to A11/X119 * |
| | 2nd end | to A10/X105 * |
| RF cable W 34 | 1st end | to A11/X117 * |
| | 2nd end | to A7/X704 * |

* The connector designation X .... is inscribed on the board, the cover of the audio board and the service label.

# 3 Assembly of Unit

## 3.1 Affixing Option Label

➢ Stick "OPTION INCL." label to the power supply (Fig.3).

## 3.2 Fitting Enclosure

➢ Mount enclosure and rear feet in the reverse order to that described under points 1.2/1.3 (Fig. 1).

# 4 Functional Test of Option CMU-B41

- Connect unit to AC supply and switch on.

## 4.1 Automatic Module Data Adjustment

- During startup observe the display.
- When three BEEPs can be heard, press the *MENU SELECT* key.

The VersionManager is started (see also chapter 4, *Firmware update*). The display includes the menu item *FIRMWARE UPDATE AFTER BOARD CHANGE*.

- Press the softkey to the left of the above mentioned menu item.

The automatic module data adjustment is performed under software control, firmware updates for microprocessors and programmable devices being performed as well. This may take a few minutes.

After the adjustment has been terminated, the operating software starts automatically and the CMU is ready for use and complies with the specifications.

## 4.2 Checking Option Detection

- Press SETUP hardkey in the SYSTEM field.
- Press OPTIONS softkey on the row below the display.
- Check if CMU-B41 is displayed and active.

## 4.3 Checking the Function

- Connect AF OUT socket to AF IN socket on CMU with a BNC cable.
- Press MENU SELECT hardkey in the FUNCTION field. Select Audio in the function group with the rotary knob on the display and confirm with ENTER.
- Switch generator to ON in the Audio Overview menu, set 1000 mV level and 1 kHz frequency.
- Set analyzer in the Audio Overview menu to RUN. The measured voltage should be 1000 mV +-25 mV.

# Installation of Option CMU-B52 SPEECH CODEC (1100.5400.02)

*Contents*


**1 Preparation ..... 2**

**2 Installation of Option ..... 4**

**3 Assembling Unit ..... 6**

**3.1 Affixing Option Label ..... 6**

**3.3 Putting Cover Back ..... 6**

**4 Functional Test of Option CMU-B52 ..... 7**

**4.1 Automatic Module Data Adjustment ..... 7**

**4.2 Test of Option Detect ..... 7**


This option may also be installed at the customer's.

To install this option, option CMU-B21 must be built in before (1100.5200.02).

# 1 Preparation

1.1 Switch off unit and unplug power cable.

1.2 Screw off cabinet feet (four cross-recessed screws, size 2).

1.3 Place unit on handles at the front, push casing upwards and remove (Fig. 1).

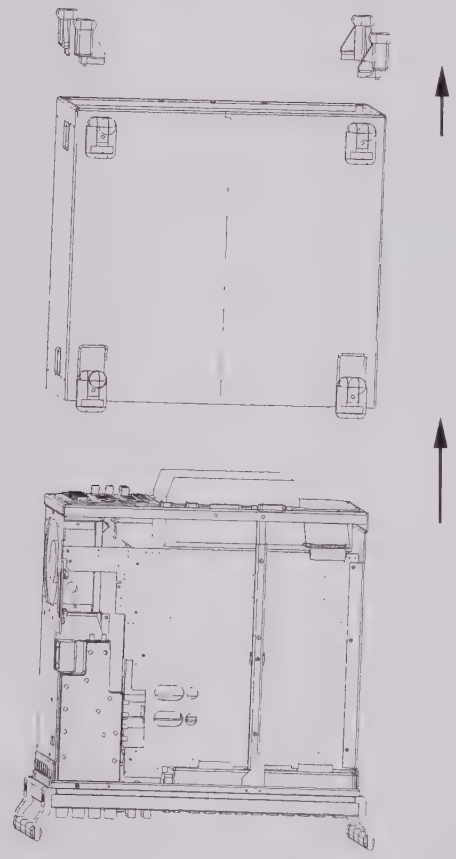

**Fig. 1**

➢ After undoing two countersunk head screws at the top left frame, raise cover slightly, push somewhat to the right and take it off towards the top.

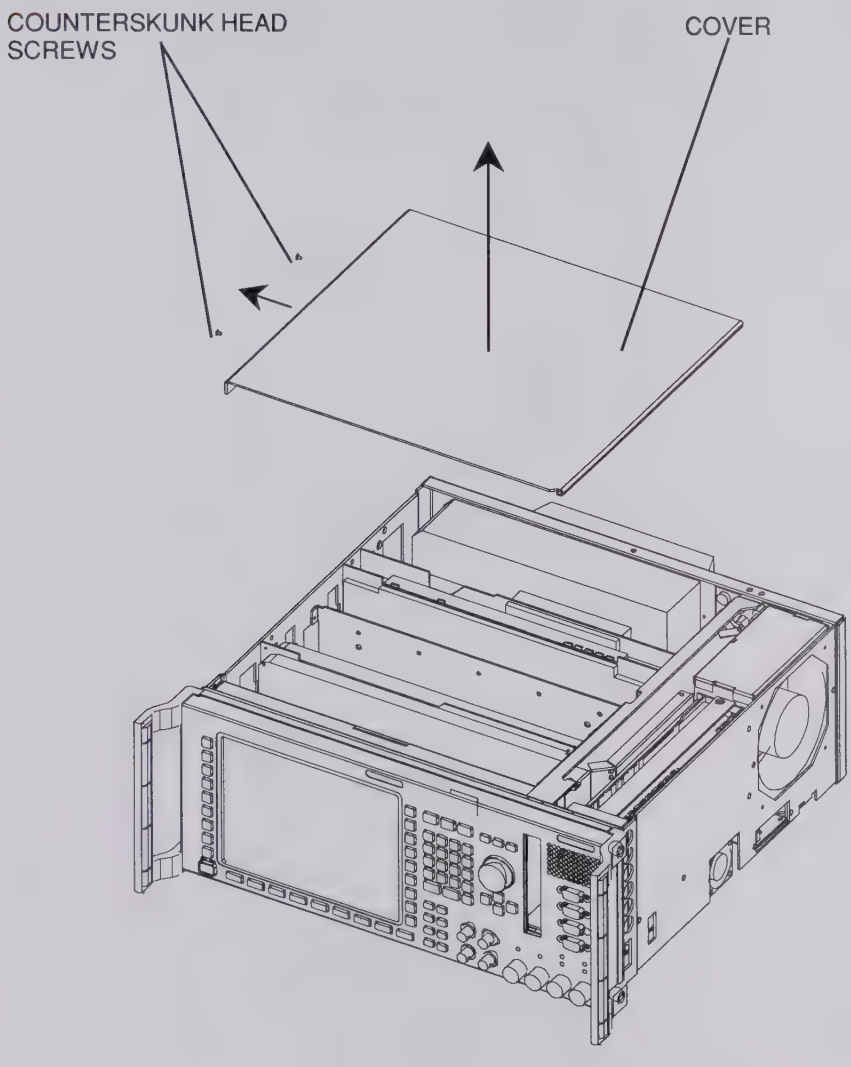


**Fig. 2**

# 2 Installation of Option

- Remove module CMU-B21 from slot seven as viewed from the front and undo screws on shielding enclosure (Fig. 3)
- Plug option CMU-B52 into slots on CMU-B21 A420 and A470 and affix label (Fig. 4)

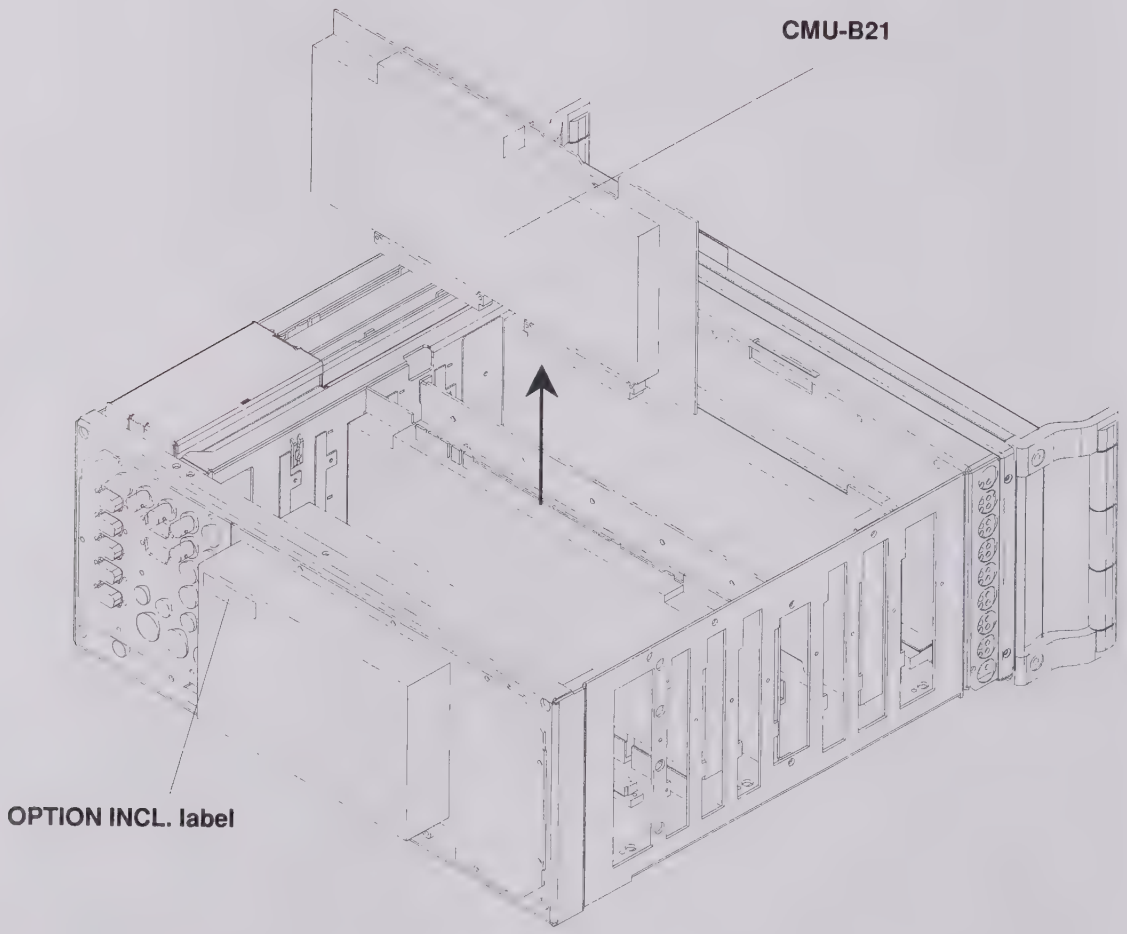


**Fig. 3**

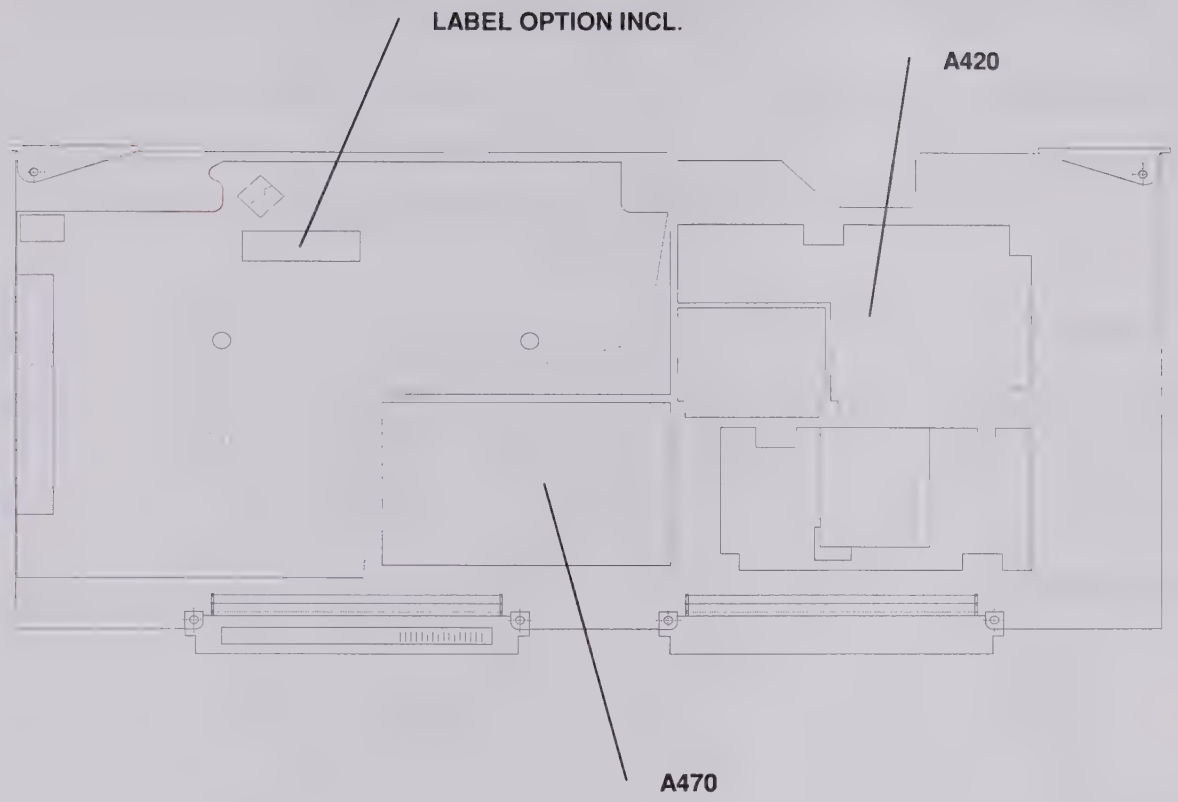


Fig. 4

# 3 Assembling Unit

## 3.1 Affixing Option Label

- Affix OPTION INCL. label on power supply unit (Fig. 3)

## 3.2 Assembly of Unit

- Fit enclosure to module and insert module into the unit (Fig. 3).
- Mount cover in the reverse order to that described under 1.4 (Fig. 2).

## 3.3 Putting Cover Back

- Fit cover and cabinet feet back on in the reverse order to that described under 1.2/1.3 (Fig. 1).

# 4 Functional Test of Option CMU-B52

- Connect unit to AC supply and switch on

## 4.1 Automatic Module Data Adjustment

- During startup observe the display.
- When three BEEPs can be heard, press the *MENU SELECT* key.

The VersionManager is started (see also chapter 4, *Firmware update*). The display includes the menu item *FIRMWARE UPDATE AFTER BOARD CHANGE*.

- Press the softkey to the left of the above mentioned menu item.

The automatic module data adjustment is performed under software control, firmware updates for microprocessors and programmable devices being performed as well. This may take a few minutes.

After the adjustment has been terminated, the operating software starts automatically and the CMU is ready for use and complies with the specifications.

## 4.2 Test of Option Detect

- Press SETUP hardkey in SYSTEM panel
- Press OPTIONS softkey located on the row of keys at bottom of display
- --> Check whether CMU-B21 is active

# Installation of Option CMU-B53 BLUETOOTH F.CMU (1100.5700.02)

*Contents*


1 **Preparation** ..... 2

2 **Installation of Option** ..... 4

3 **Modification of Universal Link Handler (Fig. 4)** ..... 5

4 **Assembling the Unit** ..... 6

5 **Functional Test of Option CMU-B53** ..... 6


This option may also be installed at the customer's.
Required hardware: CMU-B21

# 1 Preparation

- Switch off unit and unplug power cable.
- Screw off cabinet feet (four cross-recessed screws, size 2).
- Place unit on handles at the front, push casing upwards and remove (Fig. 1).

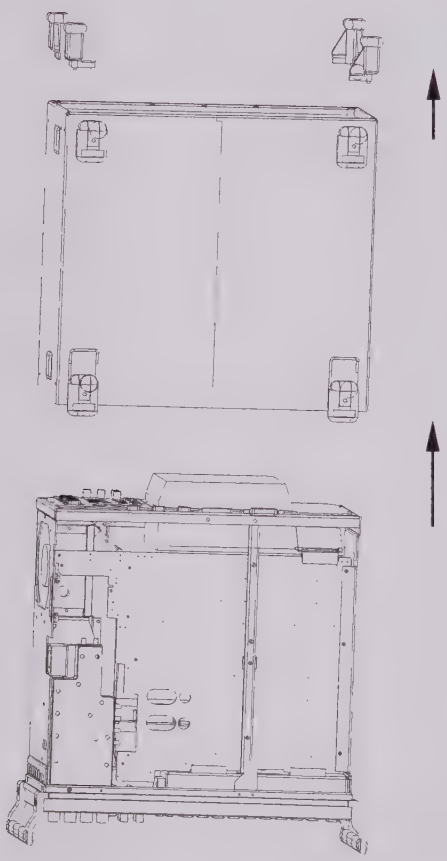

**Fig. 1**

- After undoing two countersunk head screws at the top left frame, raise cover slightly, push somewhat to the right and take it off towards the top.

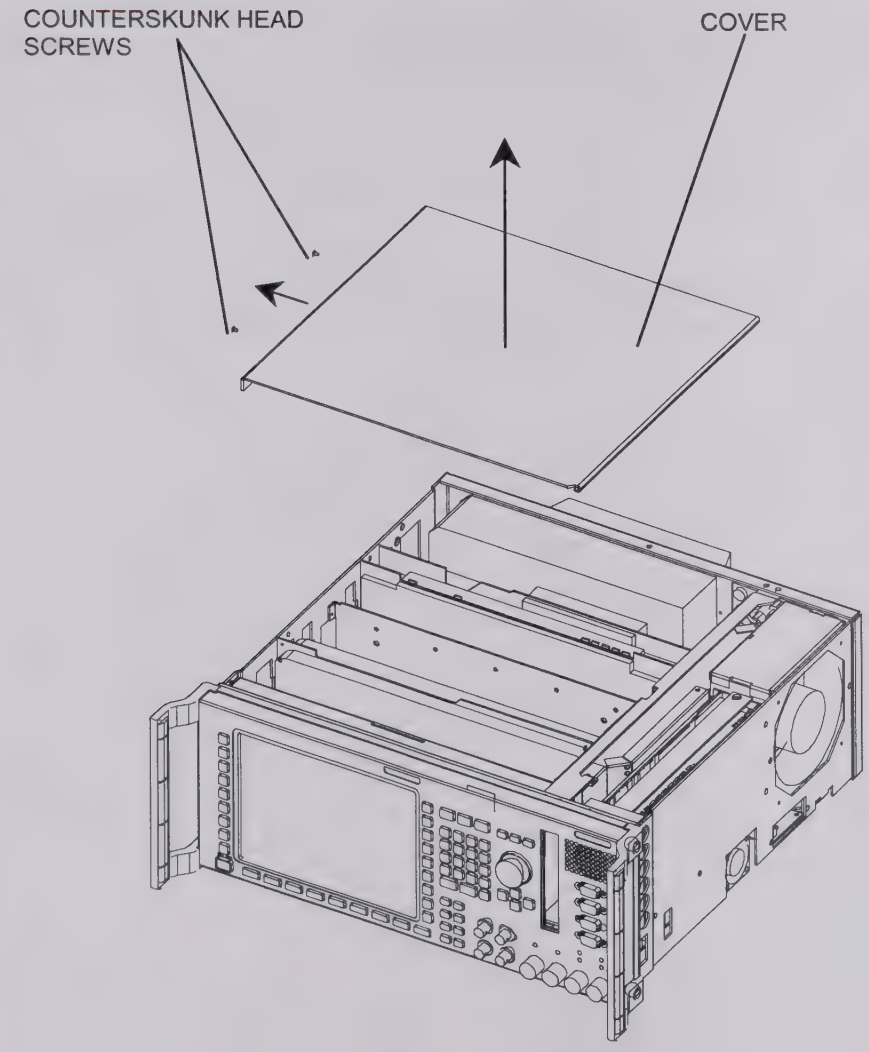


**Fig.2**

# 2 Installation of Option

- If the module in the second slot from the instrument front has the order no. 1100.1404.02 or 1100.1733.02, then it is not possible to fit option CMU-B53. Use modification kit CMU-U53 instead.

- Remove module CMU-B21 in the seventh slot seen from the front (Fig. 3).

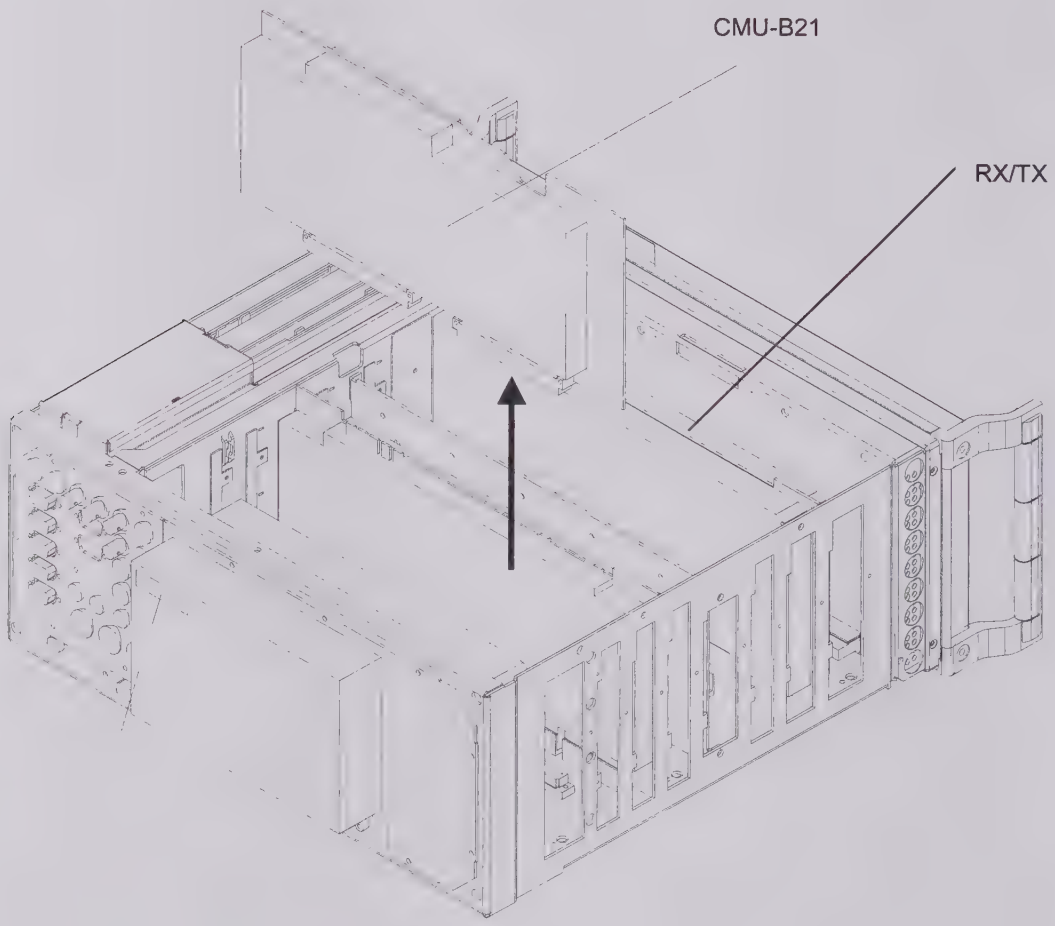


**Fig. 3**

# 3 Modification of Universal Link Handler (Fig. 4)

- Remove the two screen covers after undoing the screws.

If the TAZ (update status) of the Link Handler base plate (1097.3570.02) is lower than –03.06-, refer to Service Info No. 1304. The update status (TAZ) can be seen on the barcode label stuck to the solder side of the board inside the screening strip.
If the update status (TAZ) of the I/Q Out module on slot A430 (1100.2000.02) is lower than –03.08-, refer to Service Info No. 1305. The update status (TAZ) is visible when the covers are removed.

- If the optional Speech Codec CMU-B52 (1100.5400.02) is fitted, remove the module in slot A420 (it is no longer required).
- Insert Bluetooth module 1135.6502.02.
- Stick the OPTION INCL. (1100.5797.00) label to the cover at the solder side.
- Screw back the two screen covers and insert Link Handler into the unit.

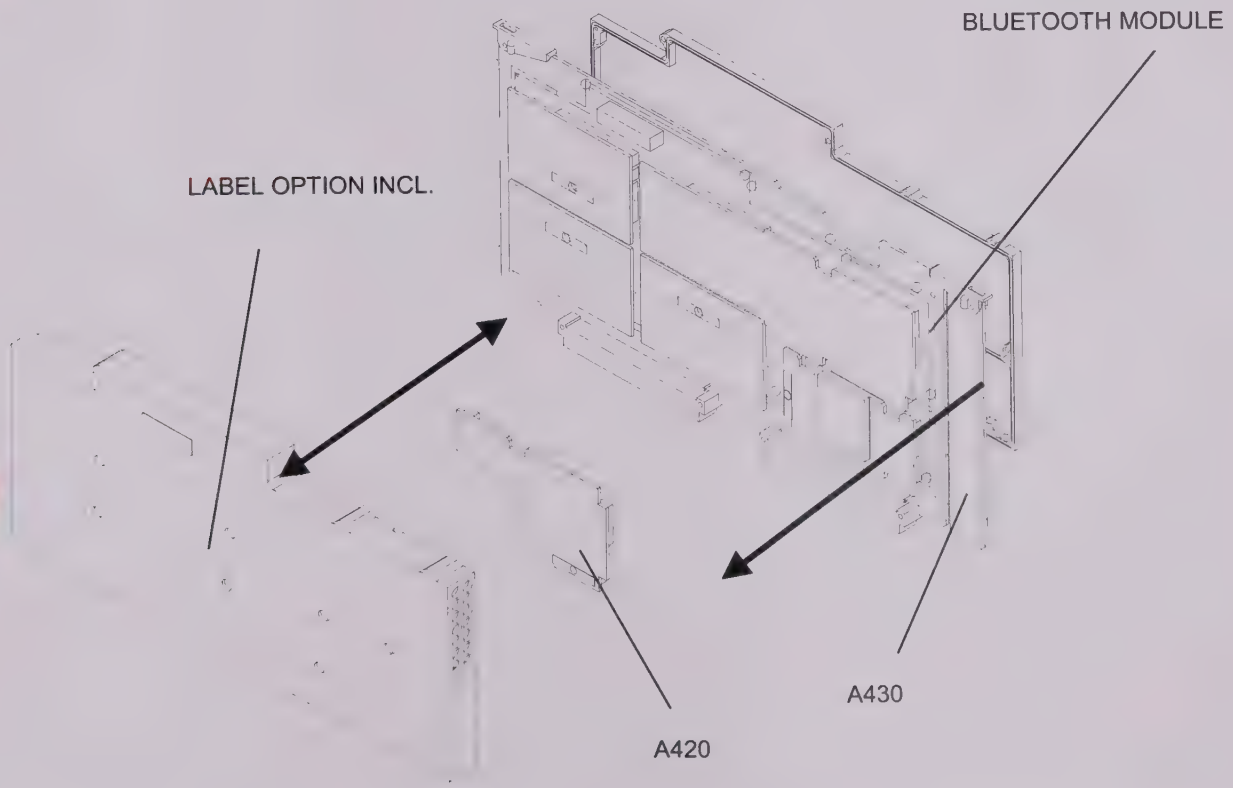


**Fig. 4**

# 4 Assembling the Unit

➢ Fit cover and cabinet feet back on in the reverse order to that described under 1.2/1.3/1.4 (Fig. 1 + 2).

# 5 Functional Test of Option CMU-B53

➢ Connect unit to AC supply and switch on.

## Automatic module data adjustment

➢ During startup observe the display.
➢ When three BEEPs can be heard, press the *MENU SELECT* key.

The VersionManager is started (see also chapter 4 in CMU 200 manual, *Firmware update*). The display includes the menu item *FIRMWARE UPDATE AFTER BOARD CHANGE*.

➢ Press the softkey to the left of the above mentioned menu item.

The automatic module data adjustment is performed under software control, firmware updates for microprocessors and programmable devices being performed as well. This may take a few minutes.

After the adjustment has been terminated, the operating software starts automatically and the CMU is ready for use and complies with the specifications.

## Test of Option Detection

Software version ≥ 2.60 must be provided in the instrument.
➢ Press SETUP hardkey in SYSTEM panel.
➢ Press OPTIONS softkey located on the row of keys at bottom of display.
➢ Check whether CMU-B21 and CMU-B53 is active.
➢ If required install software option CMU-K53 and activate key code.

See Chapter 1 in CMU-K53 manual.

## Functional Test

➢ Calibrate the FM path in the Maintenance menu.
➢ Perform Bluetooth function test with Bluetooth DUT.
➢ Connect a Bluetooth module to RF2 via RF cable or antenna.
➢ Perform inquiry procedure.
➢ Set up a connection to the Bluetooth DUT.
➢ Check results in *Power* and *Modulation* menu.

# Modification Kit CMU-U53 BLUETOOTH F.CMU (1100.7302.02)

*Contents*


1 **Preparation** ..... 2

2 **Board Exchange** ..... 4

3 **Modification of Universal Link Handler** ..... 5

4 **Assembling the Unit** ..... 10

5 **Functional Test of Modification Kit CMU-U53** ..... 10


Required hardware: CMU-B21

# 1 Preparation

- Switch off unit and unplug power cable.
- Screw off cabinet feet (four cross-recessed screws, size 2).
- Place unit on handles at the front, push casing upwards and remove (Fig. 1).

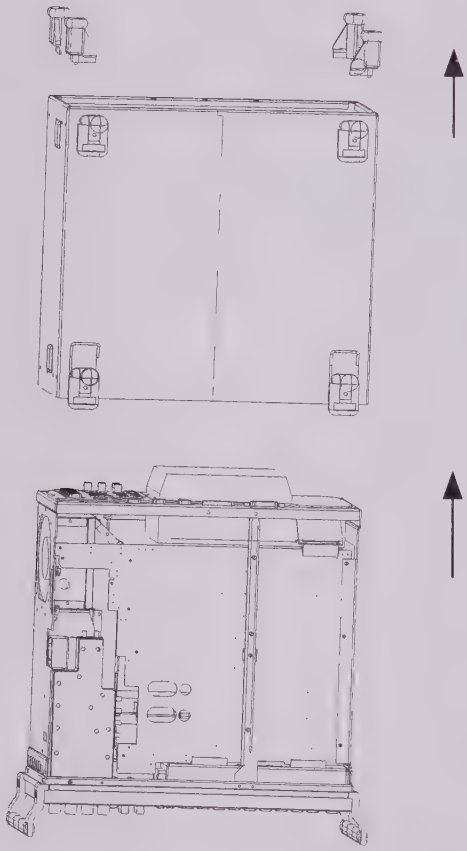

**Fig. 1**

➢ After undoing two countersunk head screws at the top left frame, raise cover slightly, push somewhat to the right and take it off towards the top.

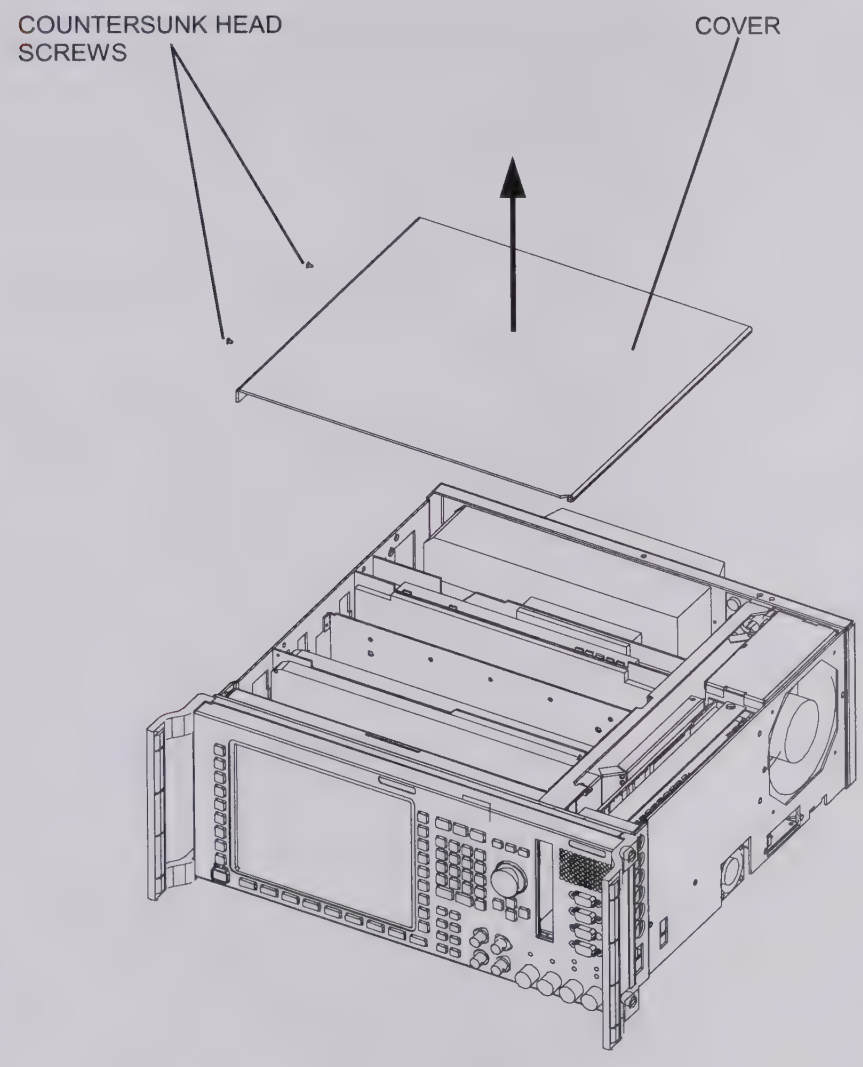


**Fig. 2**

# 2 Board Exchange

- If the module in the second slot from the instrument front has the Order No. 1100.1404.02 or 1100.1733.02, replace it by the RX/TX module included in the modification kit. Caution: cables are to be disconnected at the top and the bottom of the instrument (Fig. 3).

- Remove module CMU-B21 in the seventh slot seen from the front (Fig. 3).

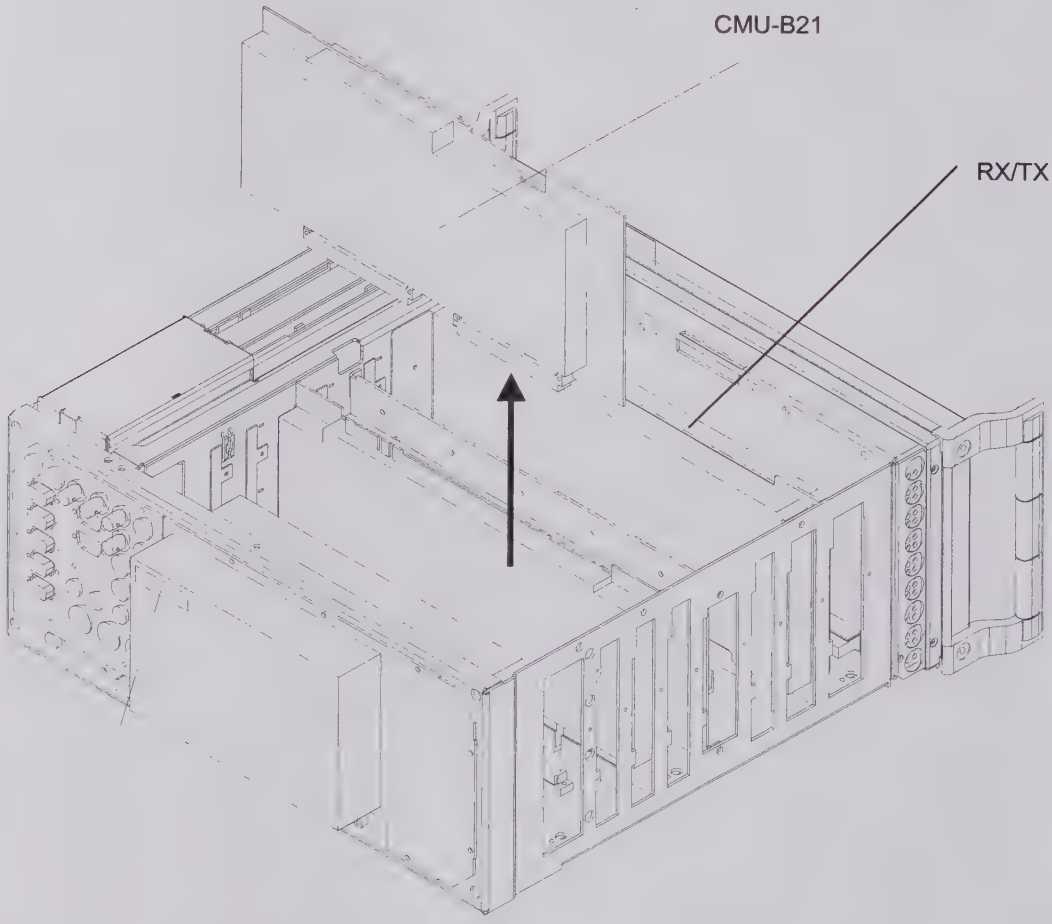


**Fig. 3**

# 3 Modification of Universal Link Handler

- Remove the two screen covers after undoing the screws (Fig. 4).
- If the TAZ (update state) of the Link Handler base plate (1097.3570.02) is lower than -03.06-, modify as shown in Fig. 5.
- The update status (TAZ) can be seen on the barcode label stuck to the solder side of the board inside the screening strip.
- If the TAZ of the Link Handler base plate in slot A430 (1097.3570.02) is lower than -03.06-, modify the top screen cover (labelled) as shown in Fig. 6.
- If the update status (TAZ) of the I/Q Out module on slot A430 (1100.2000.02) is lower than –03.08-, modify as shown in Fig. 7.

The update status (TAZ) is visible when the covers are removed.

- If the optional Speech Codec CMU-B52 (1100.5400.02) is fitted, remove the module in slot A420 (it is no longer required, Fig. 4).
- Insert Bluetooth module 1135.6502.02 (Fig. 4).
- Stick the OPTION INCL. (1100.5797.00) label to the cover at the solder side (Fig. 4).
- Screw back the two screen covers and insert Link Handler into the unit (Fig.3 and 4).

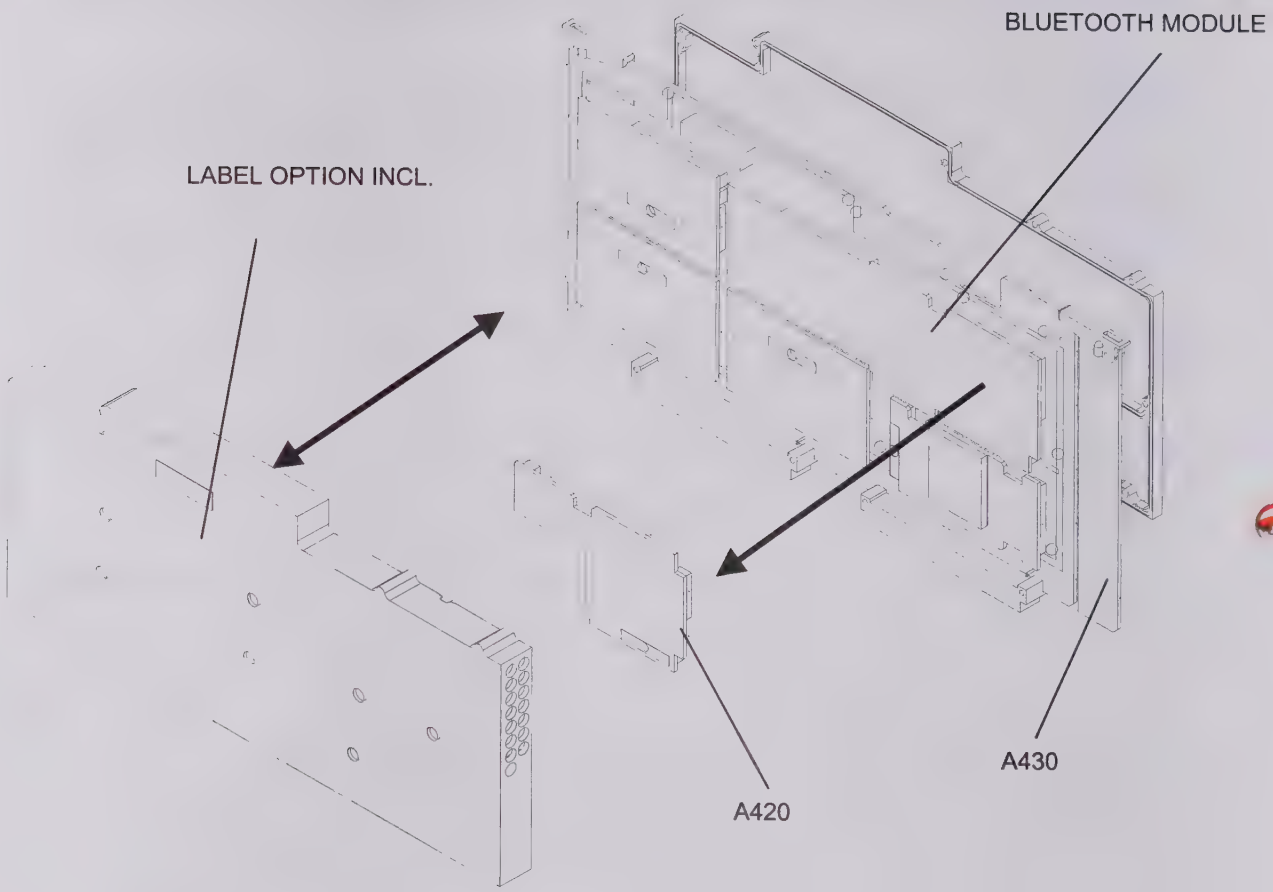


**Fig. 4**

Modifications on component side:

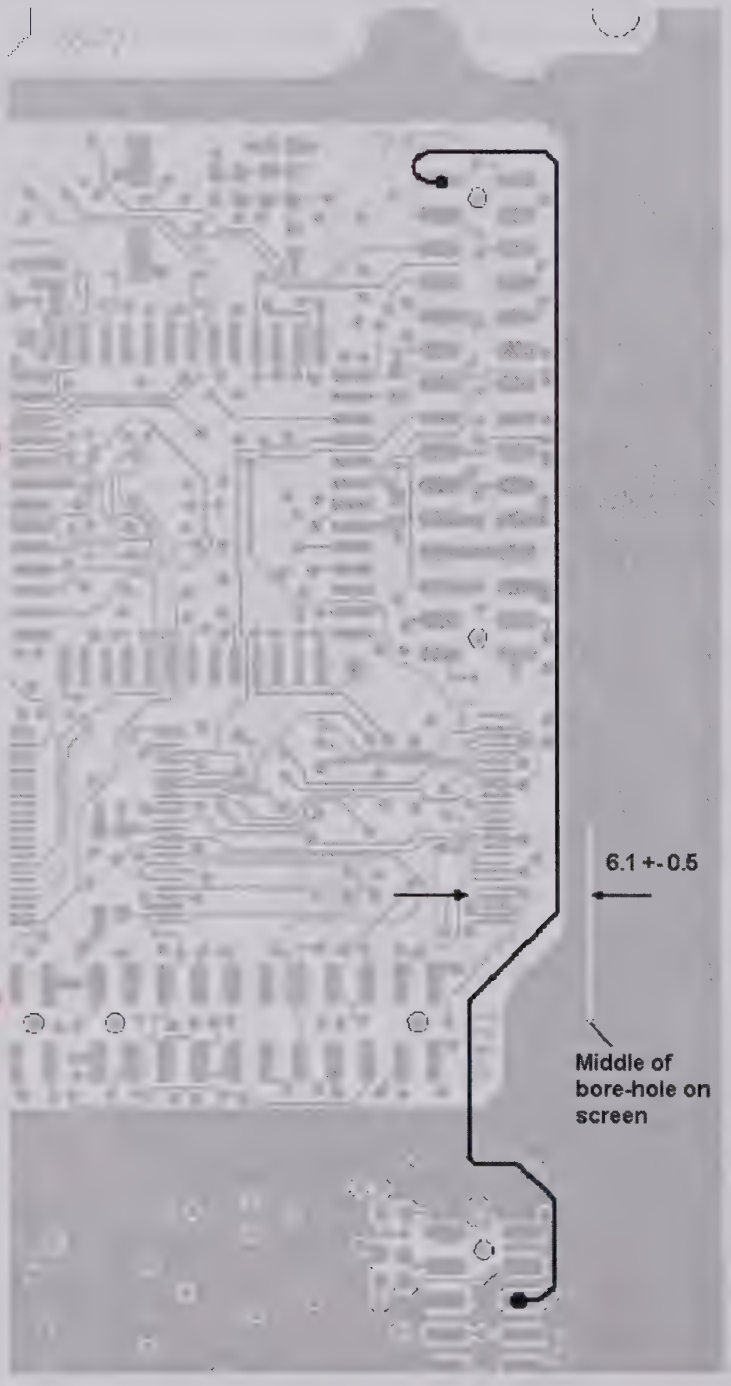


Connect pin 30 of X422 to pin 29 of X432.

Fix wires with UV glue.

**Fig. 5**

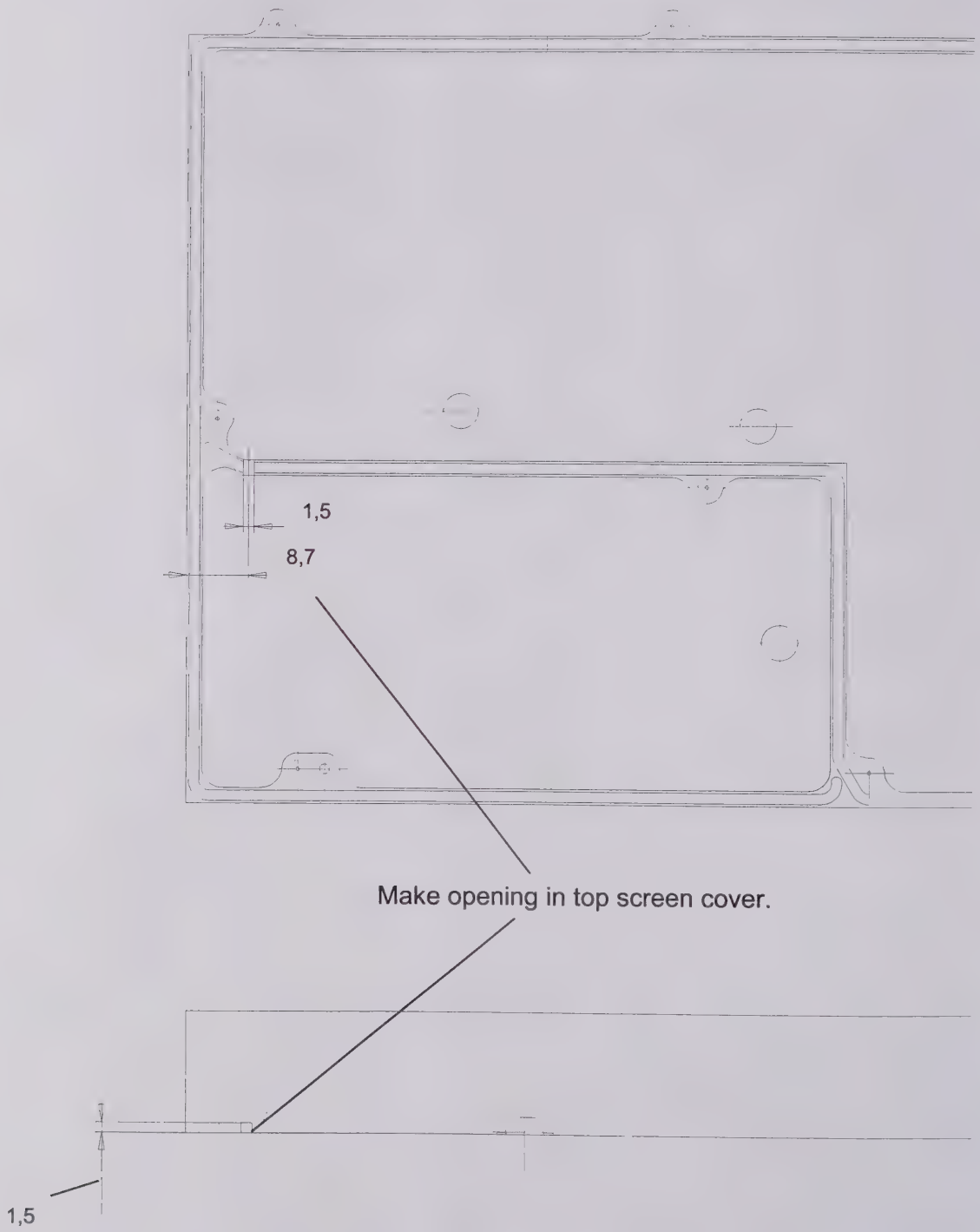


**Fig. 6**

Modifications on component side:

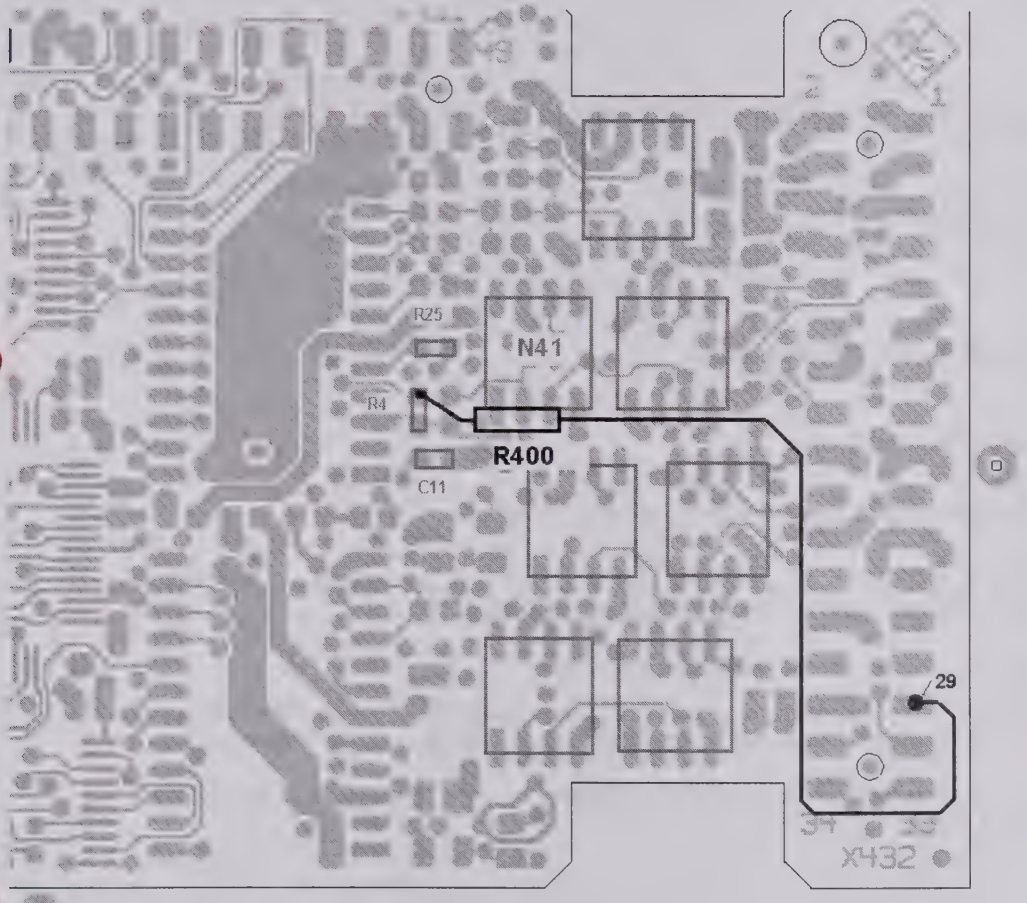


Connect 2.43 kΩ resistor R400 (stock no. 0083.0884.00, included in the modification kit) closely to R4 (upper pad) and to pin 29 of X432.

**Fig. 7**

# 4 Assembling the Unit

➢ Fit cover and cabinet feet back on in the reverse order to that described under 1.2/1.3/1.4 (Fig. 1 and 2).

# 5 Functional Test of Modification Kit CMU-U53

➢ Connect unit to AC supply and switch on.

## Automatic module data adjustment

➢ During startup observe the display.

➢ When three BEEPs can be heard, press the MENU SELECT key.

The VersionManager is started (see also chapter 4 in CMU 200 manual, *Firmware Update)*. The display includes the menu item FIRMWARE UPDATE AFTER BOARD CHANGE.

➢ Press the softkey to the left of the above mentioned menu item.

The automatic module data adjustment is performed under software control, firmware updates for microprocessors and programmable devices being performed as well. This may take a few minutes.

After the adjustment has been terminated, the operating software starts automatically and the CMU is ready for use and complies with the specifications.

## Test of Option Detection

Software version > 2.60 must be provided in the instrument.

➢ Press SETUP hardkey in SYSTEM panel.

➢ Press OPTIONS softkey located on the row of keys at bottom of display.

➢ --> Check whether CMU-B21 and CMU-B53 is active.

➢ Install software option CMU-K53 and activate key code (see instructions supplied with the modification kit).

## Calibration

Since the Rx/Tx module was replaced, a complete instrument calibration (ACS) has to be performed:

- Calibrate the FM path in the *Maintenance* menu.

## Bluetooth Functional Test

- Connect a Bluetooth module to RF2 via RF cable or antenna.
- Perform inquiry procedure.
- Set up a connection to the Bluetooth DUT.
- Check results in *Power* and *Modulation* menu.

# Installation of Option CMU-U61 FLOPPY DISKDRIVE (1100.5500.02)

*Contents*

**1 Preparation** ..... **2**

**2 Installation of Option** ..... **5**

**3 Assembling Unit** ..... **8**

**4 Functional Test of Option CMU-U61** ..... **9**

This option may also be installed at the customer's.

# 1 Preparation

1.1 Switch off unit and unplug power cable.

1.2 Screw off cabinet feet (four-recessed screws, size 2).

1.3 Place unit on handles at the front, push casing upwards and remove (Fig. 1).

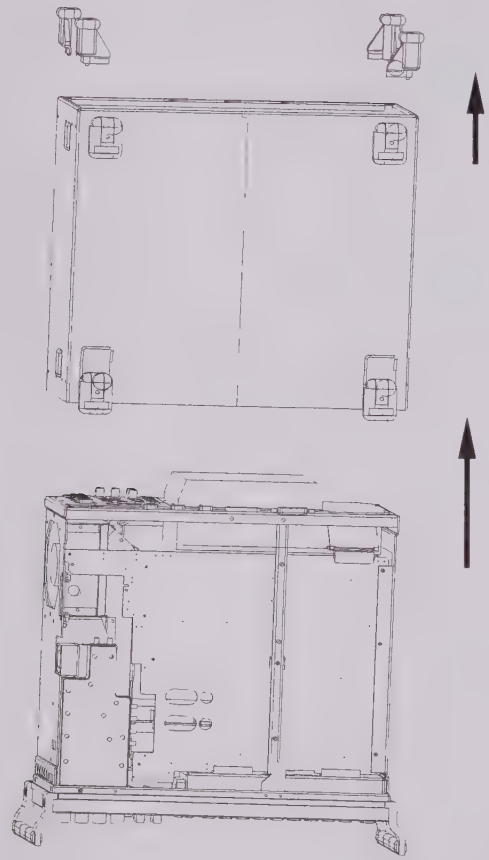

**Fig. 1**

1.4 Undo four screws from front handles and take off handles.

1.5 Undo the countersunk screw (if any) at the front on the labelling panel next to the rollkey and pull panel to the front.

1.6 Undo two countersunk screws each from the top and bottom frame at the front as well as two countersunk screws above the AUX1/2 BNC connector at the front.

1.7 Undo screw and nut assembly at the top on holding bracket for PCMCIA Interface.

1.8 Having taken out the two countersunk screws at top left frame, slightly raise top cover, then push it somewhat to the right and finally remove cover towards the top.

1.9 Push the front module to the front by slightly exerting pressure at the back (Fig. 2).

***Caution**: Beware of the connecting cables for the PCMCIA Interface which are still connected to motherboard 1.*

1.10 After withdrawing the front module, unplug the three connecting cables of PCMCIA Interface from the motherboard.

1.11 Take out the front module completely from the CMU.

1.12 Undo two countersunk screws of PCMCIA Interface on the right side of the mounting plate and push the module to the front side.

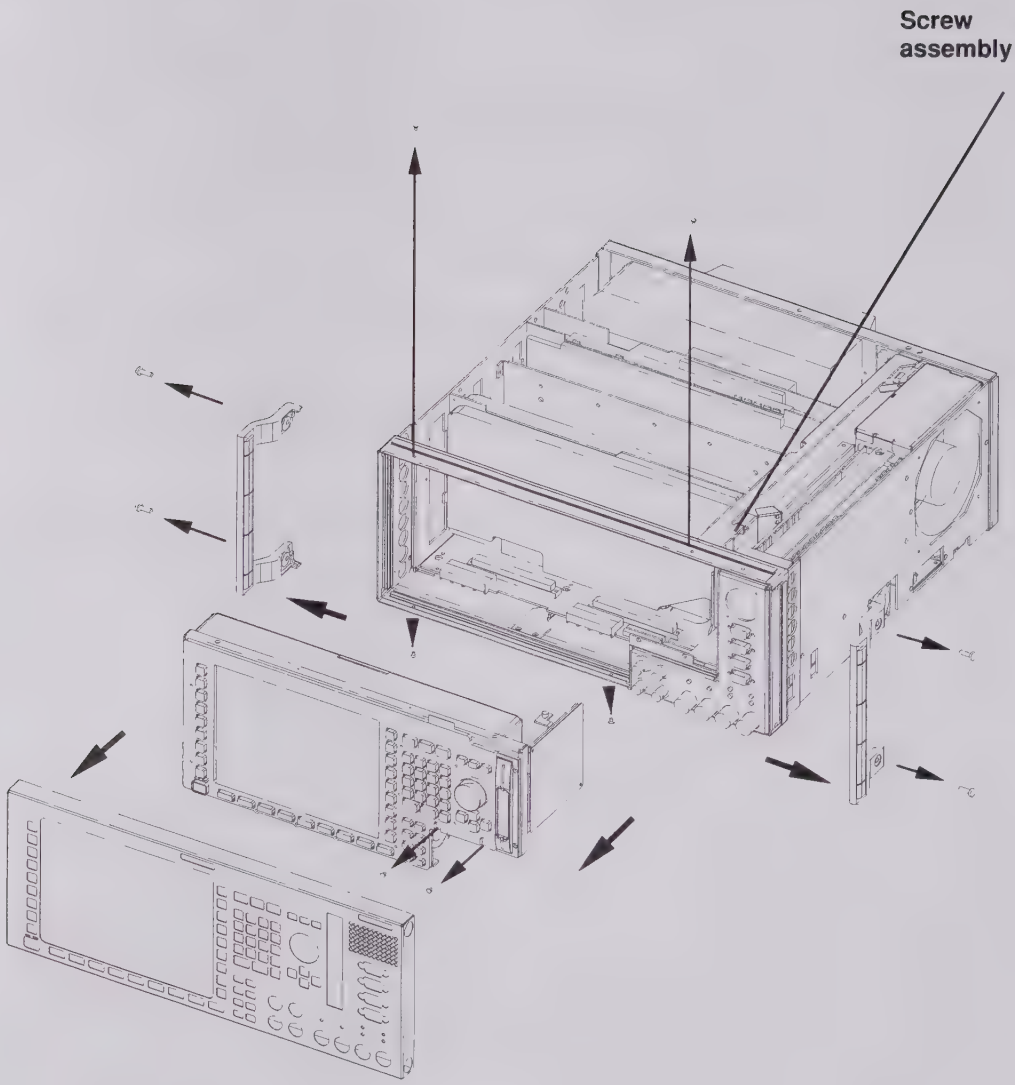


Fig. 2

# 2 Installation of Option

➢ Fold up flat cable (Fig. 3).

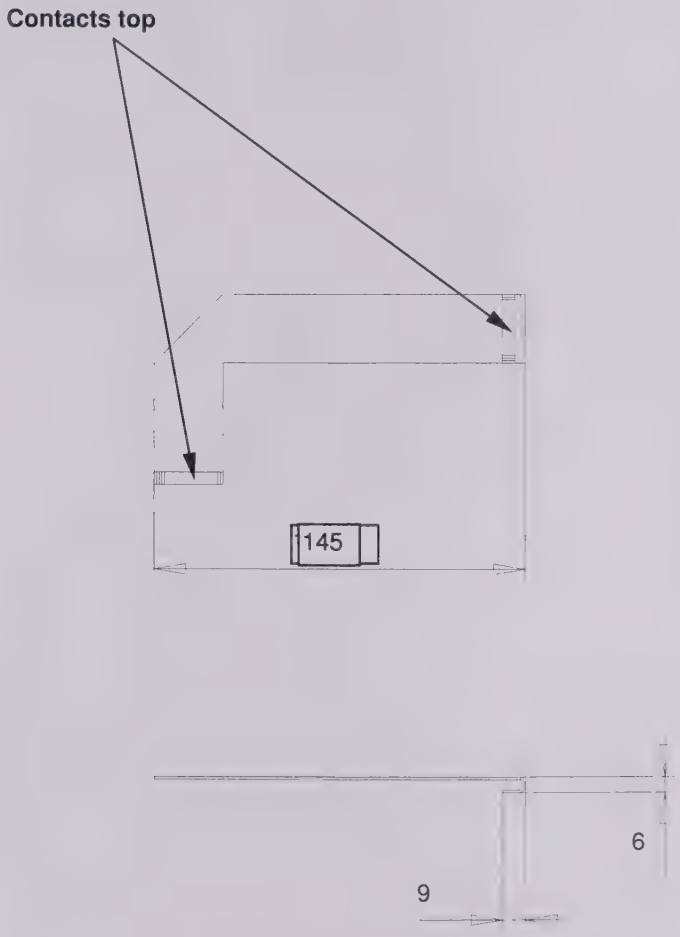


**Fig. 3**

➢ Fit floppy drive to holding frame and plug flat cable (Fig. 4).

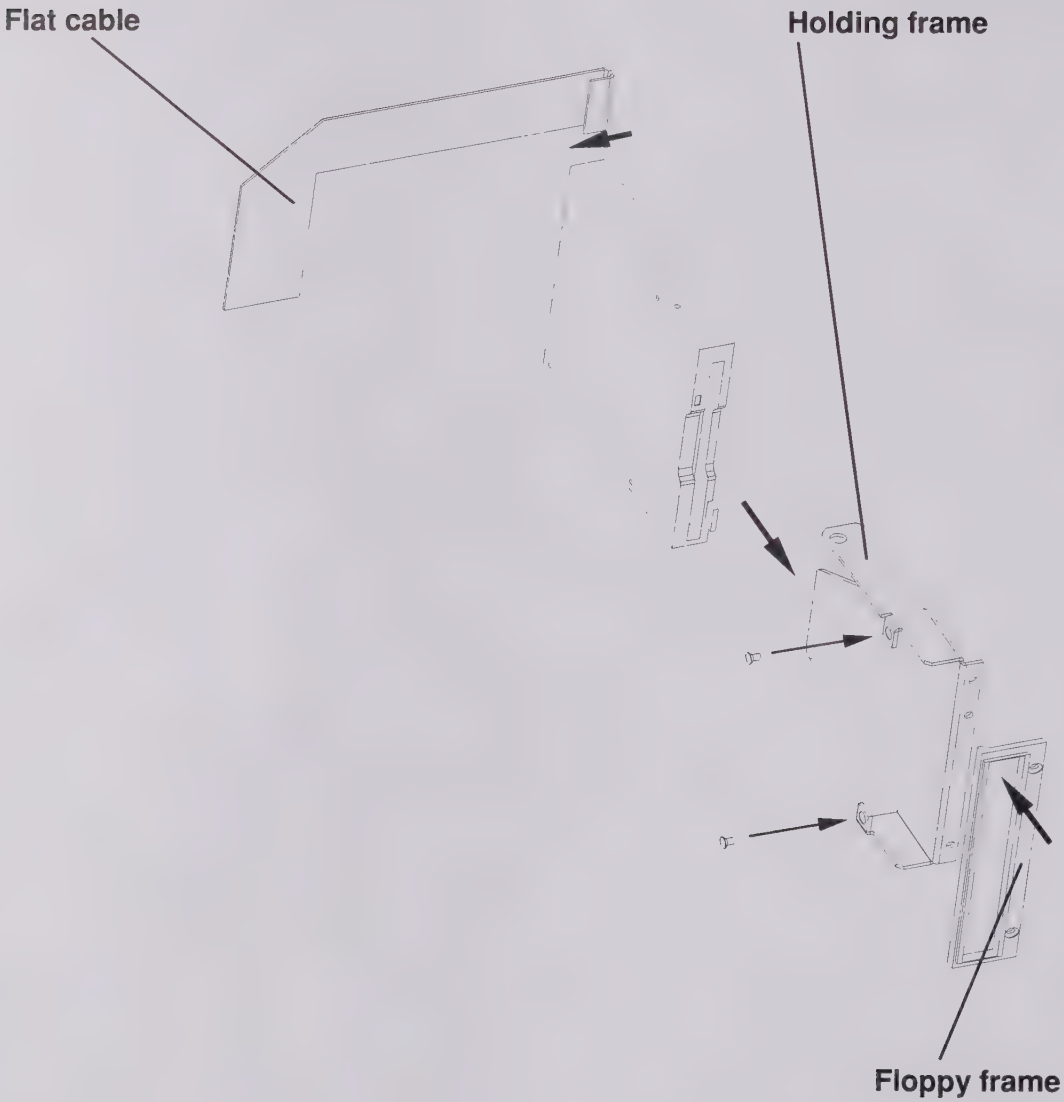


**Fig. 4**

➢ Fit floppy drive with frame to front module using two countersunk screws supplied (Fig. 5).

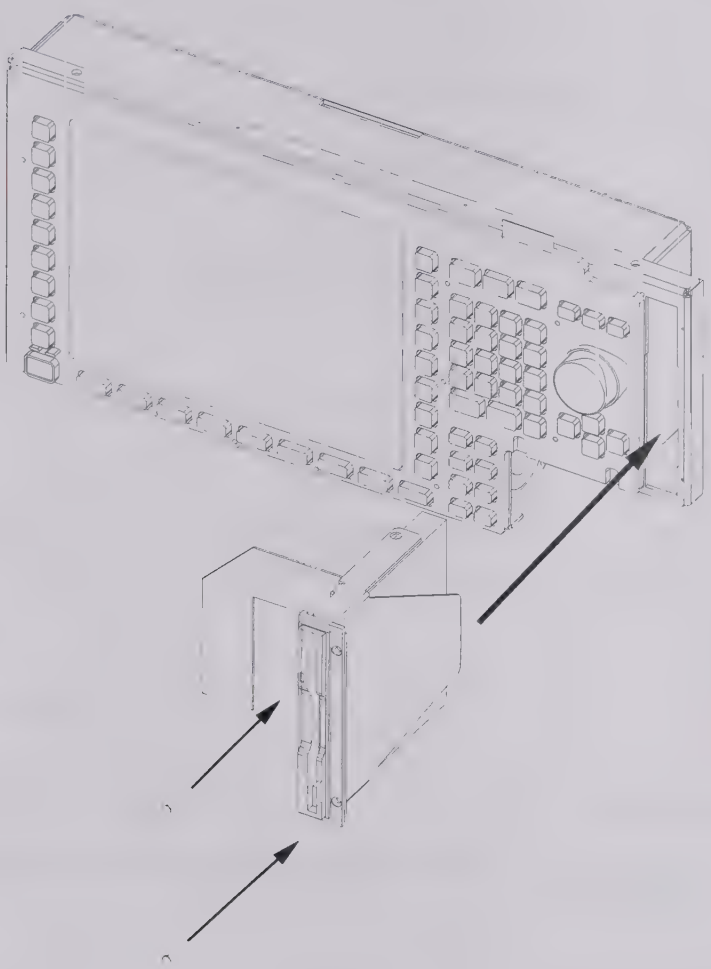

**Fig. 5**

# 3 Assembling Unit

## Affixing Label

➢ Affix „CMU-U61“ label on power supply unit (Fig. 6).

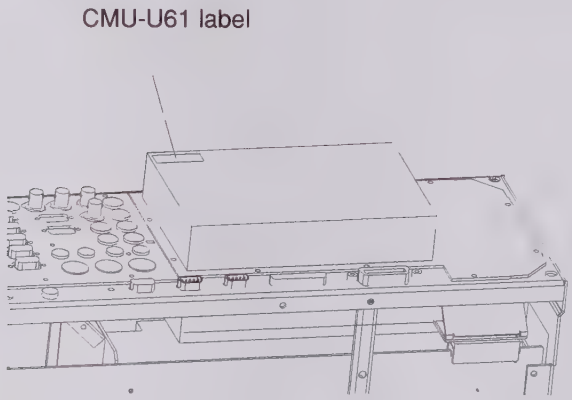


**Fig. 6**

## Re-Mounting Front-Panel

➢ Mount front module, labelling panel, front handles and casing in the reverse order to that described under 1.4 to 1.11 (Fig. 2).

➢ Connect the free end of flat cable to X218 on the motherboard.

## Putting Casing Back

➢ Fit casing and cabinet feet in the reverse order to that described under 1.2 / 1.3 (Fig. 1).

# 4 Functional Test of Option CMU-U61

- Connect unit to AC supply and switch on.

## Enter Floppy Disk Drive into BIOS setup

If PCMCIA Interface is retrofitted on Floppy Disk Drive CMU-U61 or Floppy Disk Drive CMU-U61 is fitted for the first time the following alterations are necessary in BIOS setup:

- Connect external keyboard to the keyboard connector on the rear panel of CMU.
- Switch CMU off and on.
- Press delete key on external keyboard to enter BIOS setup.
- Select "Setup Standard" with cursor keys and confirm with enter.
- Select "Floppy A" with cursor keys and confirm with enter.
- Select "1.44MB 3.5" with cursor keys and confirm with enter.
- Press ESC twice to leave BIOS setup and confirm with enter. CMU starts automatically again.

### Test of Option Detect

- Press SETUP hardkey in SYSTEM panel.
- Press OPTIONS softkey located on the row of keys at bottom of display.

  --> Check whether option CMU-U61 is displayed and active.

### Test of Option

- Press the key combination ALT and F4 on the external keyboard to enter DOS mode.
- Insert disk into floppy disk drive option and enter A: on external keyboard.
- Check whether disk is detected and can be read.

# Installation of Option CMU-B71 ABIS INTERFACE UNIT (1100.6406.02)

*Contents*

**1 Preparation** ..... **2**

**2 Installation of Option** ..... **4**

**3 Assembling Unit** ..... **5**

**4 Functional Test of Option CMU-B71** ..... **5**

This option may also be installed at the customer's.

# 1 Preparation

1.1 Switch off unit and unplug power cable.

1.2 Screw off cabinet feet (four cross-recessed screws, size 2).

1.3 Place unit on handles at the front, push casing upwards and remove (Fig. 1).

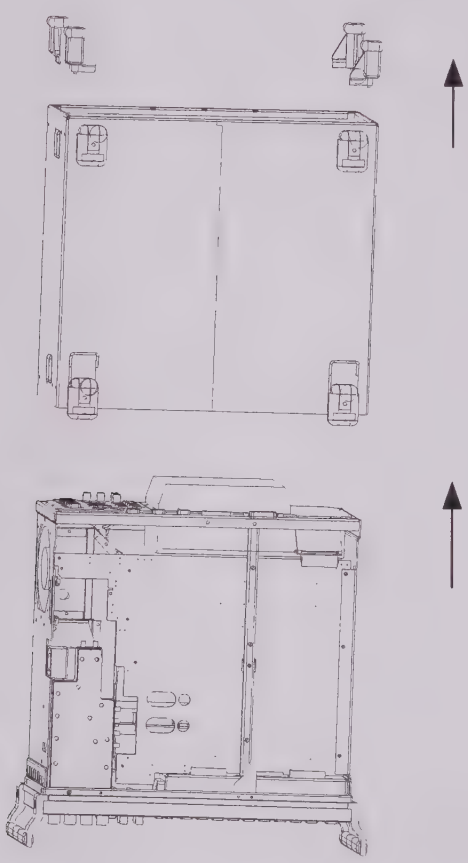

**Fig. 1**

1.4 After undoing two countersunk head screws at the top left frame, raise cover slightly, push somewhat to the right and take it off towards the top.

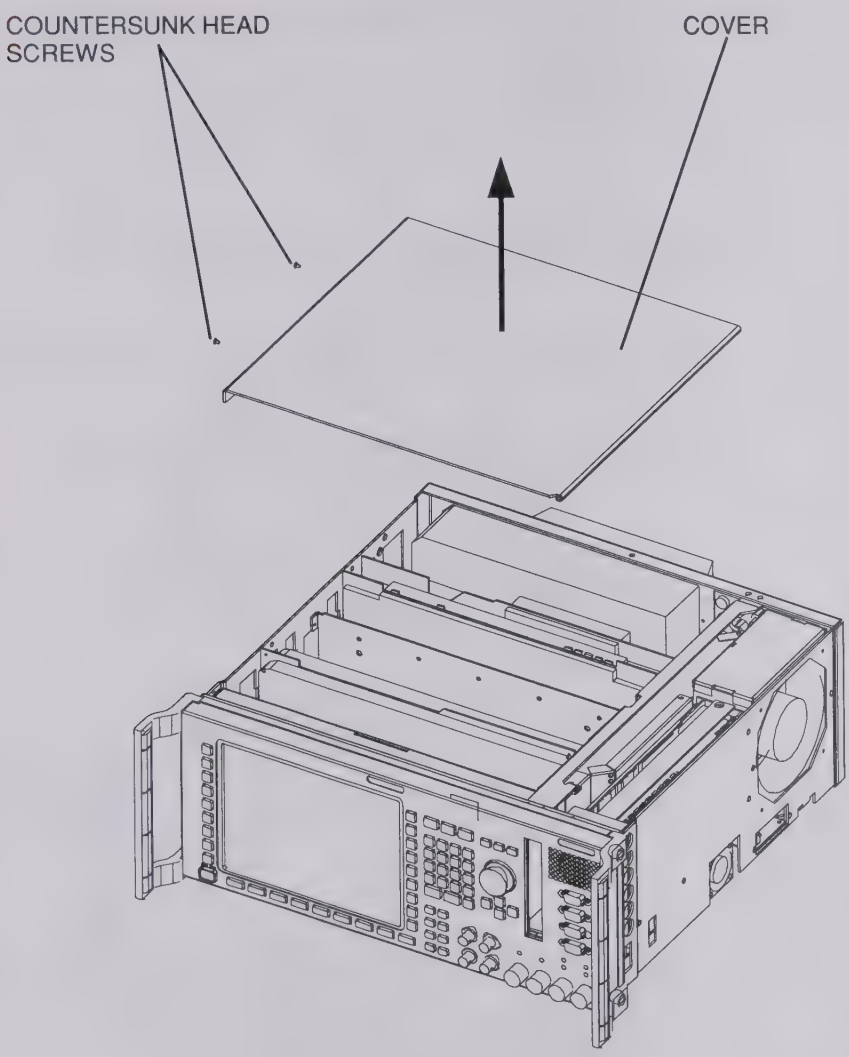


**Fig. 2**

# 2 Installation of Option

2.1 Remove cover on the vent in the intermediate panel of the 1st slot as seen from the front (Fig. 3).

2.2 Insert CMU-B71 into 1st slot as seen from the front.

2.3 Fit cables W714, W713, W700.

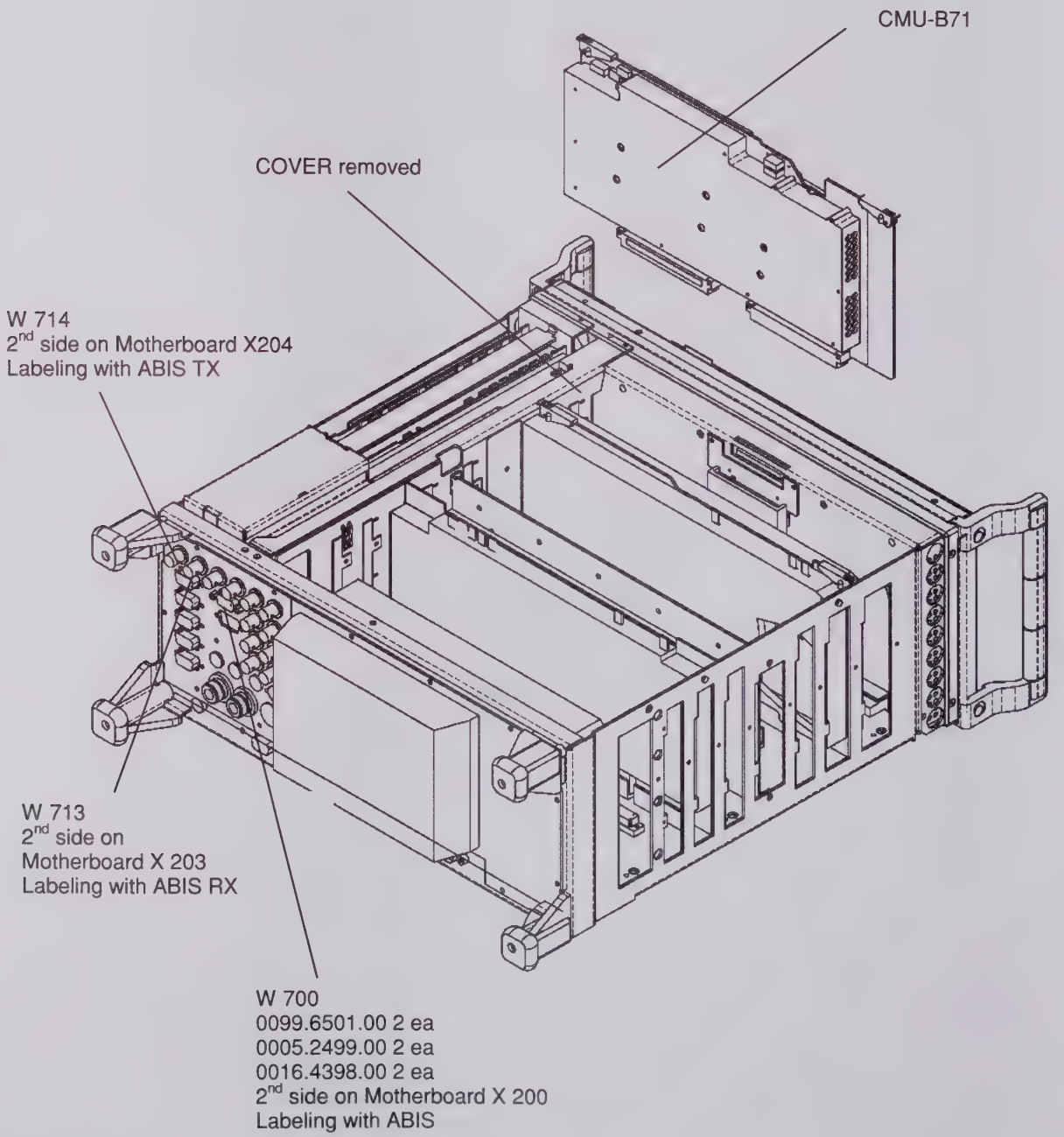


**Fig. 3**

# 3 Assembling Unit

## 3.1 Putting Cover Back

Fit cover and cabinet feet back on in the reverse order to that described under 1.2/1.3 (Fig. 1).

# 4 Functional Test of Option CMU-B71

## 4.1 Connect unit to power and switch on

## 4.2 Automatic Module Data Adjustment

- On booting the CMU, watch the display.
- When you hear three beeps, press the *MENU SELECT* key.

  The *VersionManager* is started (see also chapter 4 of CMU Service Manual Instrument, *Firmware update*). The display offers the menu item *FIRMWARE UPDATE AFTER BOARD CHANGE*.
- Press the softkey to the left of the above menu item.

  The module data are adjusted automatically under software control and firmware updates are performed for microprocessors and programmable components. This takes only a few minutes.

  After adjustment, the operating software is started automatically. CMU is ready for operation and complies with data sheet specifications.

## 4.3 Checking the Option Identification

- Press the SETUP hardkey in the SYSTEM field.
- Press the OPTIONS softkey in the row below the display.

  --> Check whether CMU-B71 is displayed and activated.

## 4.4 Function Test

- Press the *MENU SELECT* hardkey in the *FUNCTION* field.
- Select *GSM900 BTS* function group, *Signalling* mode and *Overview* menu and press the *Enter* hardkey.
- Press the $A_{bis}$ softkey in the row now appearing below the display.
- Press the *Alarm Monitor* softkey in the row to the left of the display.
- Press the *ON/OFF* hardkey in the *DATA* field.

--> The following screen is displayed:

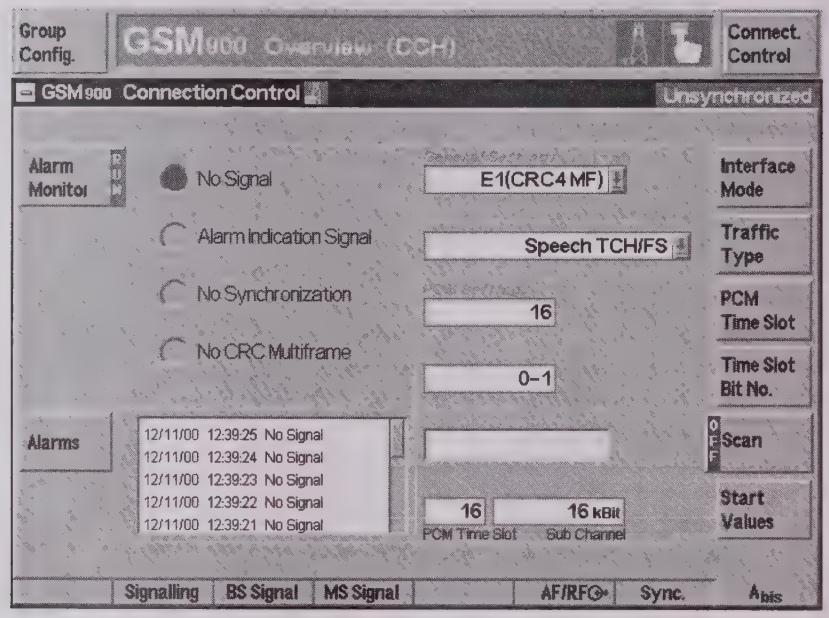


The *Alarm Monitor* softkey switches to *RUN*.

The *NO Signal* LED symbol is red.

*Alarm Indication Signal*, *No Synchronization* and *No CRC Multiframe* are grey (de-activated).

Alarm messages with date and time are displayed in the window next to the *Alarms* softkey. They are continuously updated and always state *No Signal*.

➢ Then close the loopback loop by connecting the rear-panel ABIS TX BNC connector to the ABIS RX BNC connector using a BNC cable.

The LED symbols *No Signal*, *Alarm Indication Signal*, *No Synchronization* and *No CRC Multiframe* switch to green.

The message *No Signal* in the window next to the *Alarms* softkey is replaced by *No Alarm*. It may be that *No CRC Multiframe* is displayed briefly during switchover.

# Installation of Option CMU-B81 CDMA SIGN. UNIT (1100.6506.02)

*Contents*

**1 Preparation** ..... **2**

**2 Installation of Option** ..... **4**

**3 Assembling Unit** ..... **5**

**4 Functional Test of Option CMU-B81** ..... **6**

This option may also be installed at the customer's.

# 1 Preparation

1.1 Switch off unit and unplug power cable.

1.2 Screw off cabinet feet (four cross-recessed screws, size 2).

1.3 Place unit on handles at the front, push casing upwards and remove (Fig. 1).

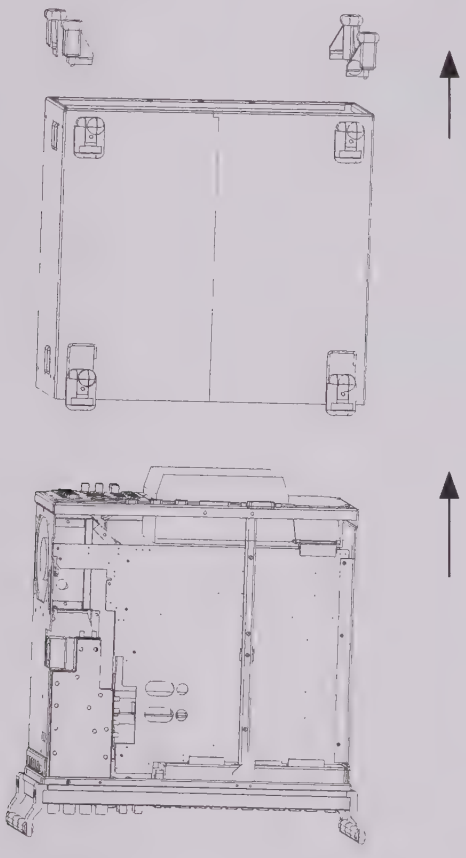

**Fig. 1**

1.4 After undoing two countersunk head screws at the top left frame, raise cover slightly, push somewhat to the right and take it off towards the top.

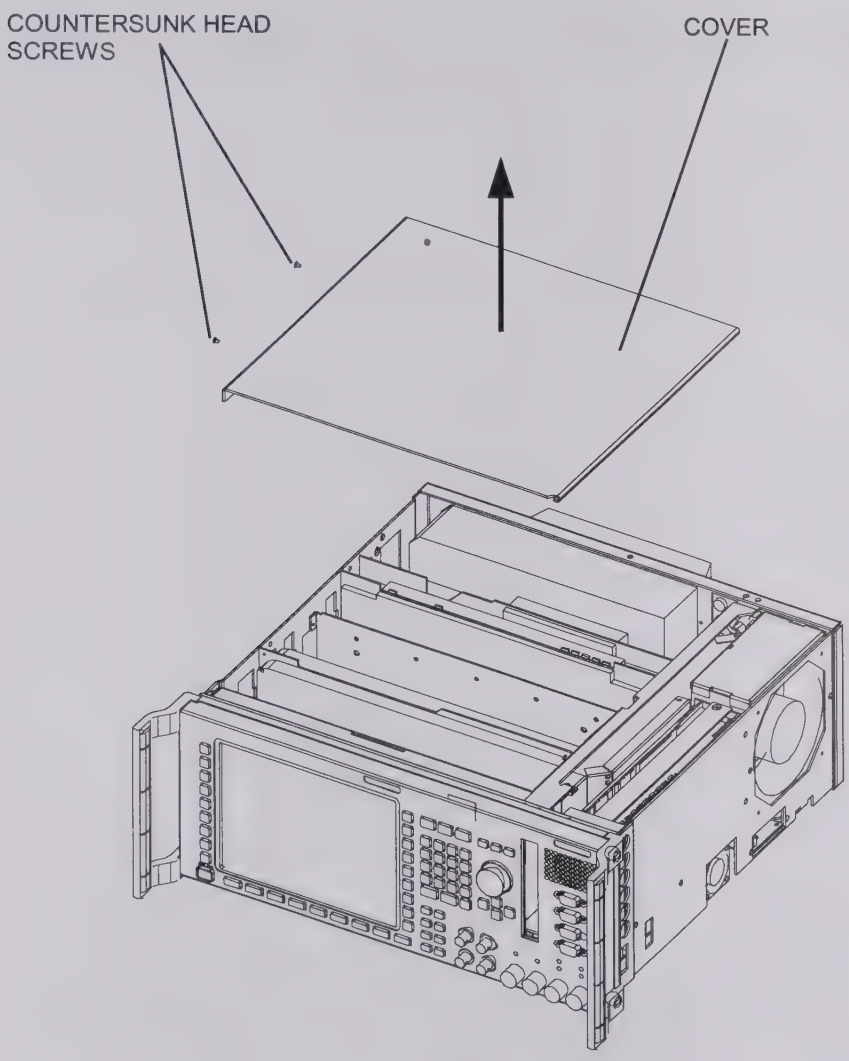


**Fig. 2**

# 2 Installation of Option

***Caution:*** *Prior to installation, check whether the connectors of the module fit into the 5th or 8th slot of the motherboard of as seen from the front panel. Depending on the result of this check, proceed according to items 2.1 and 2.2.*

2.1 Remove the cover of the ventilation opening in the partition of either the 5th or 8th slot as seen from the front panel (Fig. 3).

2.2 Insert CMU-B81 either into the 5th or 8th slot as seen from the front panel (Fig. 3).

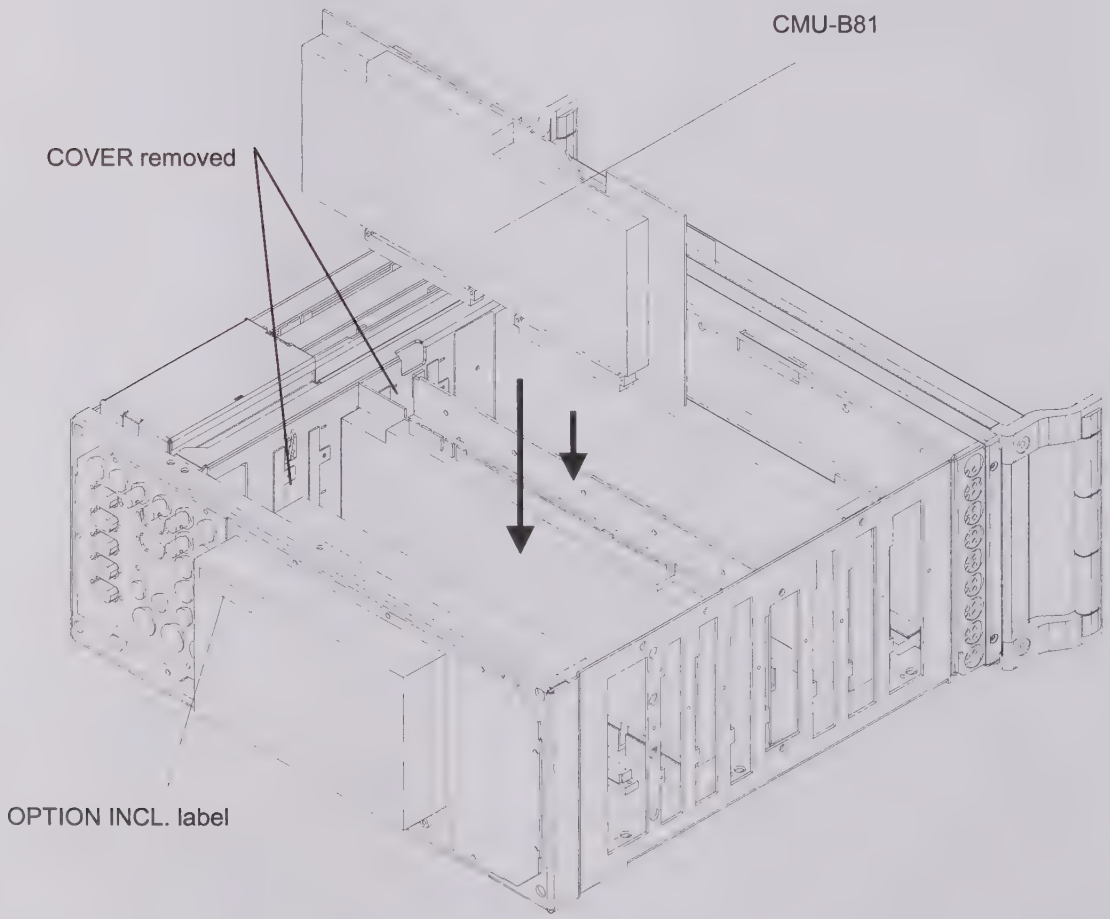


**Fig. 3**

# 3 Assembling Unit

## 3.1 Affixing Option Label

➢ Affix OPTION INCL. label on power supply unit (Fig. 2).

## 3.2 Putting Cover Back

➢ Fit cover and cabinet feet back on in the reverse order to that described under 1.2/1.3 (Fig. 1).

# 4 Functional Test of Option CMU-B81

## 4.1 Connect unit to AC supply and switch on

## 4.2 Automatic module data adjustment

- During startup observe the display.
- When three BEEPs can be heard, press the *MENU SELECT* key.

The VersionManager is started (see also chapter 4 of CMU service manual instrument, *Firmware update*). The display includes the menu item *FIRMWARE UPDATE AFTER BOARD CHANGE*.

- Press the softkey to the left of the above mentioned menu item.

The automatic module data adjustment is performed under software control, firmware updates for microprocessors and programmable devices being performed as well. This may take a few minutes.

After the adjustment has been terminated, the operating software starts automatically and the CMU is ready for use and complies with the specifications.

## 4.3 Test of Option Detection

- Press SETUP hardkey in SYSTEM panel.
- Press OPTIONS softkey located on the row of keys at bottom of display.

--> Check whether CMU-B81 is active.

## 4.4 Test of Function (only possible if options CMU- K81 or – K82 have been activated)

- Press MENU SELECT hardkey on FUNCTION panel.
- Select „CMDA IS95“ function group, „Signalling“ mode and „Overview“ menu and press the „Enter“ hardkey.
- Press the „Signal On“ key in this menu.

--> Check whether the *SIGNAL ON* indication in the top right display (blue status field) is highlighted in green.

# 5 Documents

This chapter contains the documents for the CMU basic unit. The documents for the modules with the description of function, adjustment and interfaces are relegated to the Service Manual, Stock no. 1110.4903.92. To order replacement parts and modules please contact our *spare parts express service* or your Rohde & Schwarz service representative and note the hints given in the following section, *Module and Cable Exchange*.

The address of our *spare parts express service* and a list of Rohde & Schwarz representatives can be found at the beginning of this service manual.

## Module and Cable Exchange

Table 5-1 at the end of this section lists all power cables available. The stock numbers necessary for ordering replacement parts and modules can be found in the component lists further down.

**Important Note!**

*When replacing a module please note the safety instructions and the repair instructions given in chapter 3 of this service manual.*

**Ordering replacement parts**

To deliver replacement parts promptly and correctly we need the following indications:

- Stock number (see component lists in this chapter)
- Designation
- Component number according to component list
- Number of pieces
- Instrument type the replacement part belongs to
- Contact person for possible questions

**Replaced modules**

Replaced modules are an economic alternative for original modules. It should be kept in mind that replaced modules are not new, but repaired and fully tested parts. They may have traces from use but they are electrically and mechanically equivalent to new modules.

To find out which replaced modules are available, please refer to your Rohde & Schwarz representative (or to the central service division, Rohde & Schwarz Munich). The identification number is usually the same as for the original module, but with a variant index .95, .96, .97 or .98.

**Ordering and delivery of replaced modules**

For ordering replaced modules, the same indications as for ordinary parts are required, however, with the corresponding variant index appended to the stock number.

**Taking back defective replacement modules**

Defective modules of the replacement program which can be repaired are taken back within **3 months** after delivery of the replaced module. A repurchasing value is credited.

Excluded are parts which can not be repaired, e.g. PCBs that are burnt, broken or damaged by repair attempts, incomplete modules, parts which are heavily damaged mechanically.

The defective parts must be sent back with a **returned accompanying document** containing the following information:

- Stock number, serial number and designation of the dismounted part,
- **Precise** description of the error,
- Stock number, serial number and designation of the instrument the part was dismounted from,
- Date of dismounting,
- Name of the technician who exchanged the part.

A returned accompanying document is provided with each replacement module.

Table 5-1 List of power cables available

| Stock No. | Earthed-contact connector | Preferably used in |
|---|---|---|
| DS 006.7013 | BS1363: 1967 complying with IEC 83: 1975 standard B2 | Great Britain |
| DS 006.7020 | Type 12 complying with SEV-regulation 1011.1059, standard sheet S 24 507 | Switzerland |
| DS 006.7036 | Type 498/13 complying with US-regulation UL 498, or with IEC 83 | USA/Canada |
| DS 006.7107 | Type SAA3 10 A, 250 V, complying with AS C112-1964 Ap. | Australia |
| DS 0025.2365<br>DS 0099.1456 | DIN 49 441, 10 A, 250 V, angular<br>DIN 49 441, 10 A, 250 V, straight | Europe (except Switzerland) |

ROHDE&SCHWARZ

# Overview of

# Spare Parts

## for CMU Basic Unit

## List of CMU Spare Parts

The CMU is constructed in accordance with R&S design 2000.

Overall dimension: W x H x L, 465 mm x 193 mm x 517 mm

Rackmount: 4E 1/1 T450

***Note:*** *The parts which are fitted with a Current No. can be ordered as spare parts.*

| Current No. | Designation | Stock No. | Electr.No. |
|---|---|---|---|
| 10 | Instrument frame | 1090.9080.00 | |
| 80 | Instrument fan | 1091.1001.00 | |
| 90 | Instrument fan cover | 1091.0840.00 | |
| 150 | Cover | 1100.0872.00 | |
| 170 | Cage | 1091.0111.00 | |
| 180 | Part of the mounting plate | 1091.0028.00 | |
| 190 | Partition | 1091.0128.00 | |
| 200 | Locking bracket | 1091.0405.00 | |
| 210 | Loudspeaker | 1100.0837.00 | E 1 |
| 220 | Loudspeaker support | 1091.0640.00 | |
| 220 | Cover hood large | 0009.9200.00 | |
| 230 | Cover hood small | 0143.4180.00 | |
| 240 | Cover hood medium | 0528.8500.00 | |
| 250 | Sub D cover (9-pins) | 1050.9243.00 | |
| 260 | Labeling panel | 1100.0143.00 | |
| 270 | FRONT MODULE MODEL 04=COLOR DISPLAY 48 MB / FMR4 | 1090.9244.04 | A 1 |
| 275 | FRONT MODULE MODEL 12=COLOR DISPLAY 64 MB / FMR5 | 1090.9244.12 | A 1 |

| Current No. | Designation | Stock No. | Electr.No. |
|---|---|---|---|
| 280 | Keyboard frame | 1091.1153.00 | |
| 290 | Keyboard mat | 1100.0166.00 | |
| 300 | Keyboard membrane | 1100.2008.00 | A 15 |
| 310 | Mounting plate | 1090.9680.00 | |
| 320 | Shielded filter plate | 1091.2014.00 | |
| 330 | RF Spring long | 1069.3011.00 | |
| 340 | RF Spring short | 1069.3105.00 | |
| 350 | Plate support | 0852.0844.00 | |
| 360 | LCD VAR 04 | 0048.4435.00 | A 14 |
| 365 | LCD VAR 12 | 0048.6980.00 | A 14 |
| 370 | Display connector VAR 04 | 1091.0286.00 | W 17 |
| 375 | Display connector VAR 12 | 1091.0911.00 | W 17 |
| 380 | Spinwheel VAR 04 | 0852.1140.00 | B 12 |
| 385 | Spinwheel VAR 12 | 0852.1134.00 | B 12 |
| 390 | Rotary knob | 0852.1086.00 | |
| 400 | Shielding VAR 04 | 1090.9838.00 | |
| 405 | Shielding VAR 12 | 1091.1030.00 | |
| 410 | DC/AC converter VAR 04 | 0048.3568.00 | T 3 |
| 415 | DC/AC converter VAR 12 | 0048.6996.00 | T 3 |
| 420 | Converter connector VAR 04 | 1091.2214.00 | W 13 |
| 425 | Converter connector VAR 12 | 1091.0928.00 | W 13 |
| 430 | Hood VAR 04 | 1090.9844.00 | |

| Current No. | Designation | Stock No. | Electr.No. |
|---|---|---|---|
| 435 | Hood VAR 12 | 1091.1024.00 | |
| 440 | Panel | 1090.9650.00 | |
| 450 | FRONT MODULE CONTROLLER VAR 04 | 1091.2108.00 | A 4 |
| 455 | FRONT MODULE CONTROLLER VAR 12 | 1091.2489.00 | A 4 |
| 460 | Lithium battery | 0565.1687.00 | |
| 470 | Memory MODULES 16 MB (SIMM –72) VAR 04 | 0010.9369.00 | |
| 475 | Memory MODULES 32 MB (SODIMM –144) VAR 12 | 0048.5654.00 | |
| 480 | Memory MODULES 32 MB (SIMM –72) VAR 04 | 0048.5025.00 | |
| 485 | Memory MODULES 64 MB (SODIMM –144) VAR 12 | 4054.9518.00 | |
| 490 | Hard disk program.VAR 04 | 1090.9250.00 | D 11 |
| 495 | Hard disk program.VAR 12 | 1100.0989.00 | D 11 |
| 510 | Fan VAR 04 | 1090.9867.00 | E 10 |
| 515 | Fan VAR 12 | 1091.0292.00 | E 10 |
| 520 | RF FRONTEND | 1100.3042.02 | A 20 |
| 530 | Fan | 1100.3088.00 | |
| 540 | REFERENCE BOARD | 1100.2600.02 | A 10 |
| 550 | RX/TX BOARD1 | 1100.1404.02<br>1100.1733.02[1] | A 3 |
| 555 | TR CORRECTION MODULE | 1100.1604.02 | A 301 |
| 560 | Reserved | | |
| 565 | Reserved | | |

[1] New RXTX BOARD1 1100.1733.02 replaces old RXTX BOARD1 1100. 1404.02. 1100.1703.02 cannot be replaced by 1100.1404.02

| Current No. | Designation | Stock No. | Electr.No. |
|---|---|---|---|
| 570 | DIGITAL BOARD | 1100.1791.02 | A 7 |
| 575 | DIGITAL BOARD | 1100.1804.02 | A 700 |
| 580 | DDC MODULE1 | 1100.2300.03 | A 710 |
| 585 | DDC MODULE2 | 1100.2300.03 | A 730 |
| 590 | AUC MODULE1 | 1100.2500.02 | A 760 |
| 595 | AUC MODULE2 | 1100.2500.02 | A 780 |
| 600 | TXDSP MODULE1 | 1100.2100.03 | A 750 |
| 605 | TXDSP MODULE2 | 1100.2100.03 | A 770 |
| 610 | ADC MODULE1 | 1100.2200.02 | A 720 |
| 615 | ADC MODULE2 | 1100.2200.02 | A 740 |
| 620 | MOTHERBOARD1 | 1100.1110.02<br>1100.0920.02[2, ♣] | A 200 |
| 630 | MOTHERBOARD2 | 1100.1127.02<br>1100.0937.02[3, ♣] | A 201 |
| 640 | REARPANEL BOARD1 | 1100.1140.02<br>1100.0950.02[4, ♣] | A 204 |
| 650 | REARPANEL BOARD2 | 1100.1191.02<br>1100.0966.02[5, ♣] | A 202 |
| 660 | FRONTPANEL BOARD | 1100.1204.02<br>1100.0943.02[6, ♣] | A 203 |
| 670 | POWER SUPPLY | 1091.2320.00 | A 100 |
| | **CMU-B11** OCXO REFERENCE OSC. | 1100.5000.02 | |
| 690 | OCXO REFERENCE OSC. | 1100.2900.02 | |
| | **CMU-B12** OCXO REFERENCE OSC. | 1100.5100.02 | |

2 New MOTHERBOARD1 1100.0920.02 replaces old MOTHERBOARD1 1100.1110.02. 1100.0920.02 cannot be replaced by 1100.1110.02.

3 New MOTHERBOARD2 1100.0937.02 replaces old MOTHERBOARD2 1100.1127.02. 1100.0937.02 cannot be replaced by 1100.1127.02.

4 New REARPANEL BOARD1 1100.0950.02 replaces old REARPANEL BOARD1 1100.1140.02. 1100.0950.02 cannot be replaced by 1100.1140.02.

5 New REARPANEL BOARD2 1100.0966.02 replaces old REARPANEL BOARD2 1100.1191.02. 1100.0966.02 cannot be replaced by 1100.1191.02.

6 New FRONTPANEL BOARD 1100.0943.02 replaces old FRONTPANEL BOARD 1100.1204.02. 1100.0943.02 cannot be replaced by 1100.1204.02.

| Current No. | Designation | Stock No. | Electr.No. |
|---|---|---|---|
| 710 | OCXO REFERENCE OSC. | 1100.2900.03 | |
| | **CMU-B21** UNIVERS.SIGN.UNIT | 1100.5200.02 | |
| 730 | UNIV. SIGN. UNIT | 1100.5216.02[7]<br>1100.5216.03[8] | A 8 / A 9 |
| 735 | LINK HANDLER BOARD | 1097.3570.02 | A 400 |
| 740 | DSP MODULE0 | 1097.3106.03[9]<br>1097.3129.03[9] | A 440 |
| 741 | DSP MODULE1 | 1097.3106.03[9]<br>1097.3129.03[9] | A 450 |
| 742 | DSP MODULE2 | 1097.3106.03[9]<br>1097.3129.03[9] | A 460 |
| 750 | I/Q OUT MODULE | 1100.2000.02 | A 430 |
| | **CMU-B41** AUDIO-GEN. + ANA. | 1100.5300.02 | |
| 755 | AUDIO BOARD | 1100.2800.02 | A11 |
| 756 | DSP MODULE | 1097.3106.03[9]<br>1097.3129.03[9] | A1101 |
| 757 | RF cable | 1100.3659.00 | W 34* |
| 758 | RF cable | 1100.3665.00 | W 40* |
| | **CMU-B52** SPEECH CODEC | 1100.5400.02 | A 420 |
| 760 | SPEECH CODEC | 1100.2730.02 | |
| 765 | DSP MODULE3 | 1097.3106.03[9]<br>1097.3129.03[9] | A 470 |
| | **CMU-U61** FLOPPY DISK DRIVE | 11005500.02 | |
| 780 | Floppy | 1091.2072.00 | |
| 790 | Support | 1091.0228.00 | |
| 800 | Frame | 1091.0211.00 | |

7 1100.5216.02 contains DSP MODULES 1097.3106.03 and I/Q OUT MODULE 1100.2000.02

8 100.5216.03 contains DSP MODULES 1097.3129.03 and I/Q OUT MODULE 1100.2000.02

9 New DSP MODULE 1097.3129.03 replaces old DSP MODULE 1097.3106.03. 1097.3129.03 cannot be replaced by 1097.3106.03.

* If one of the new boards (620...660) is used, all other boards (620...660) must be replaced.

| Current No. | Designation | Stock No. | Electr.No. |
|---|---|---|---|
| 810 | Flex strip connection | 1091.2066.00 | |
| 830 | PCMCIA INTERFACE | 1100.5616.02 | |
| 840 | Card slot | 1047.2006.00 | |
| 850 | RF cable | 1100.3894.00 | W 5* |
| 860 | RF cable | 1100.3907.00 | W 6* |
| 870 | RF cable | 1100.3913.00 | W 7* |
| 880 | RF cable | 1100.3920.00 | W 8* |
| 910 | RF cable | 1100.3965.00 | W 12* |
| 920 | RF cable | 1100.3971.00 | W 13* |
| 930 | RF cable | 1100.3988.00 | W 14* |
| 940 | RF cable | 1100.4010.00 | W 17* |
| 950 | RF cable | 1100.4026.00 | W 18* |
| 960 | RF cable | 1100.4032.00 | W 19* |
| 970 | RF cable | 1100.4155.00 | W 31* |
| 980 | RF cable | 1100.4161.00 | W 32* |
| 990 | RF cable | 1100.4178.00 | W 33[9] |
| 1000 | RF cable | 1100.4190.00 | W 35* |
| 1010 | RF cable | 1100.4203.00 | W 36* |
| 1020 | RF cable | 1100.4210.00 | W 37* |
| 1030 | Tube | 1100.0743.00 | |

9 New DSP MODULE 1097.3129.03 replaces old DSP MODULE 1097.3106.03. 1097.3129.03 cannot be replaced by 1097.3106.03.
* as shown in drawing 1100.0872 sheet 1.
* as shown in drawing 1100.0872 sheet 1.

| Current No. | Designation | Stock No. | Electr.No. |
|---|---|---|---|
| 1040 | Front grip | 1096.1480.00 | |
| 1050 | Screw | 1096.4780.00 | |
| 1060 | Rear panel foot | 1096.2493.00 | |
| 1070 | Instrument foot | 1096.2506.00 | |
| 1080 | Clamp | 1096.2529.00 | |
| 1090 | Tube hood | 1096.2558.00 | |

ROHDE&SCHWARZ

# Drawings of all

# CMU Spare Parts

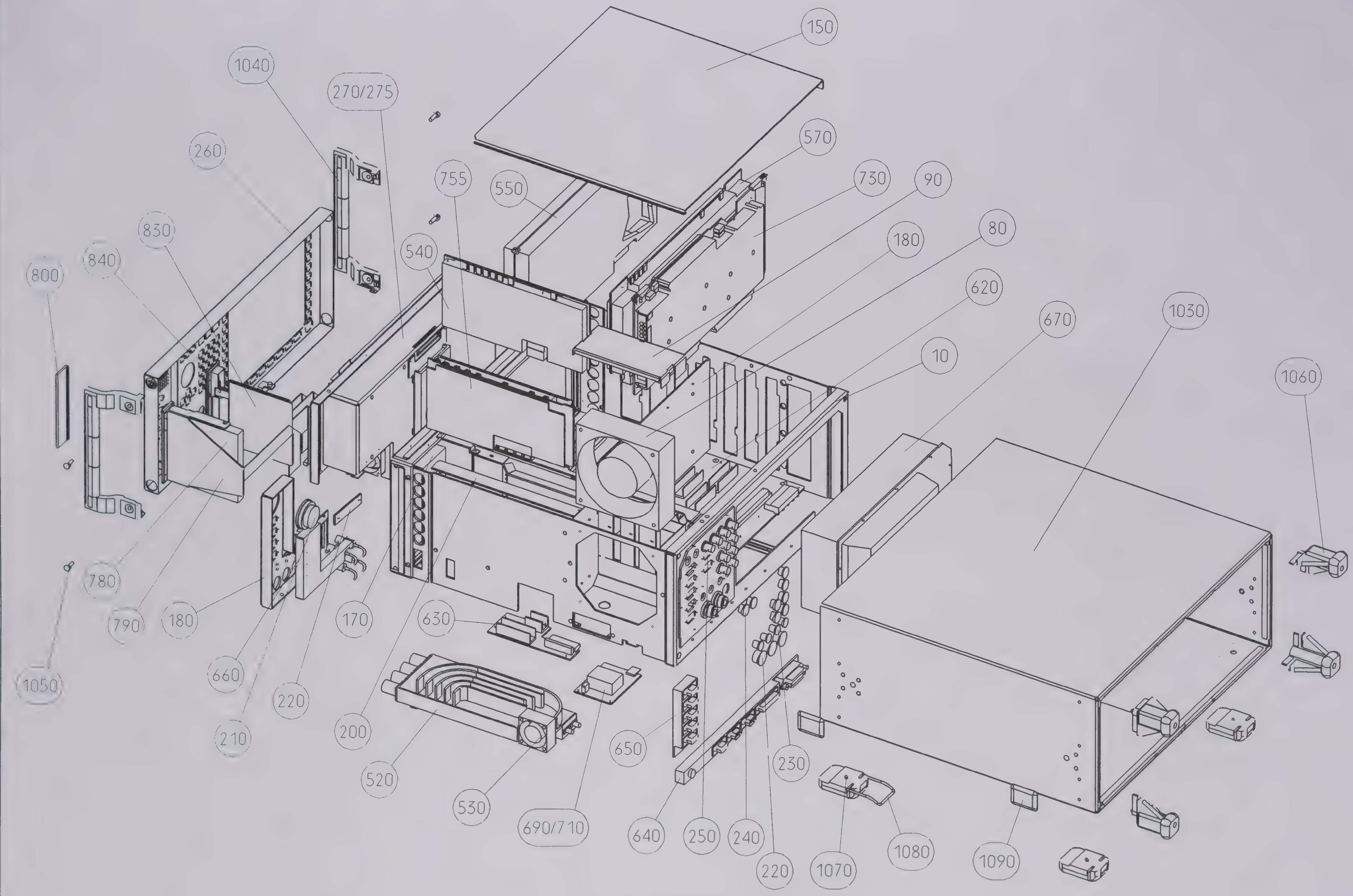


| Benennung | Sachnummer | |
|---|---|---|
| ROHDE&SCHWARZ | GG CMU200 UNIV.RADIOCOM. | 1100.0008.01 D |

2

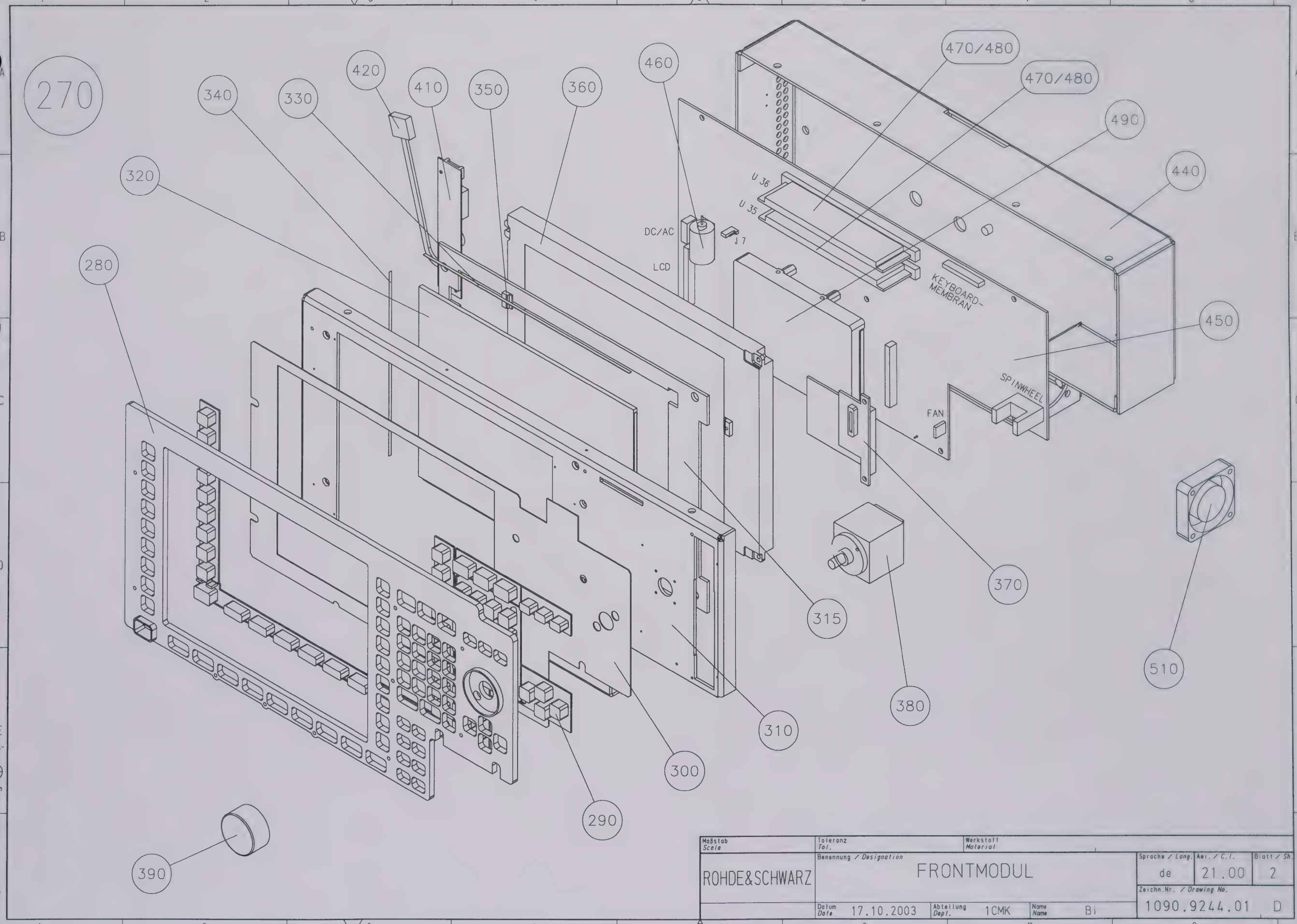


| Maßstab / Scale | Toleranz / Tol. | Werkstoff / Material | | |
|---|---|---|---|---|
| ROHDE&SCHWARZ | Benennung / Designation: FRONTMODUL | | Sprache / Lang.: de | Aei. / C.I.: 21.00 | Blatt / Sh.: 2 |
| | Datum / Date: 17.10.2003 | Abteilung / Dept.: 1CMK | Name / Name: Bi | Zeichn.Nr. / Drawing No.: 1090.9244.01 D |

Für dieses Dokument behalten wir uns alle Rechte vor
This document all rights are reser
rojektions-
methode
Projection
Method

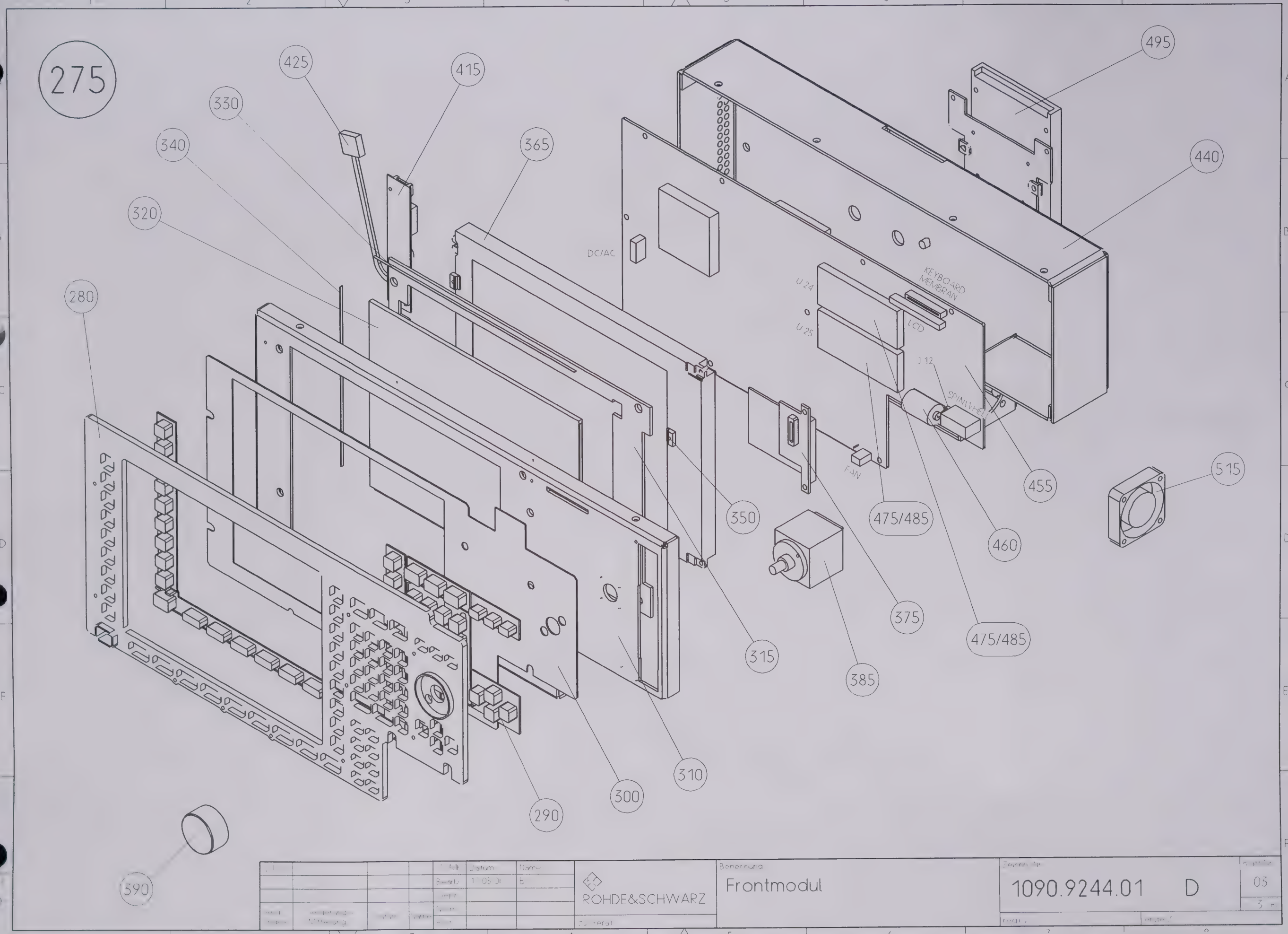
275
425
415
330
340
365
320
280
495
440
DC/AC
U 24
U 25
KEYBOARD MEMBRAN
LCD
J 12
SPINWHEEL
FAN
455
515
350
475/485
460
375
475/485
315
385
310
300
290
390
ROHDE&SCHWARZ
Benennung
Frontmodul
1090.9244.01
D
03

570

575

Affix the supplied heat conducting mat with its adhesive side to the sandwich module as shown

610 615 590 595

12 12 3,3

8 8

(A720) (A740) (A760) (A780)

4 31,5 4 31,5 2,6

1100.1791.02

(A710) (A730) (A750) (A770)

A700

580 585 600 605

Affix the supplied conducting mat with its adhesive side to the sandwich module as shown

Affix the supplied heat conducting mat with its adhesive side to the sandwich module as shown

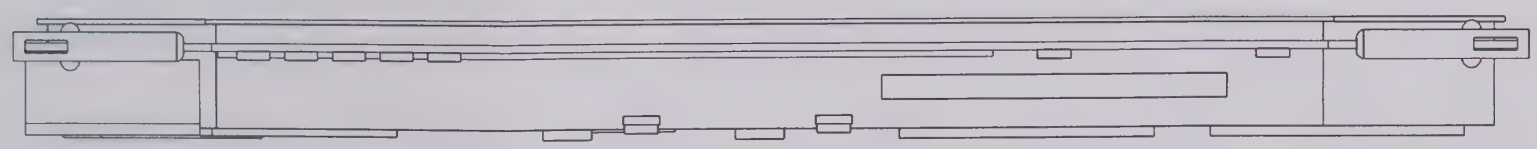

| | | | | | | | |
|---|---|---|---|---|---|---|---|
| | | | | Maße ohne Toleranzangabe | | Bl. 1 1 | |
| 04.01 | | 29.04.99 | Bi | | | Benennung | DIGITALBOARD |
| | | | | | | Zeichn.-Nr | 1100.1791.01 D |
| | | | | ROHDE&SCHWARZ | | | |
| | | | | | | reg. V. 1100.0008.00 | erste Z. |

550

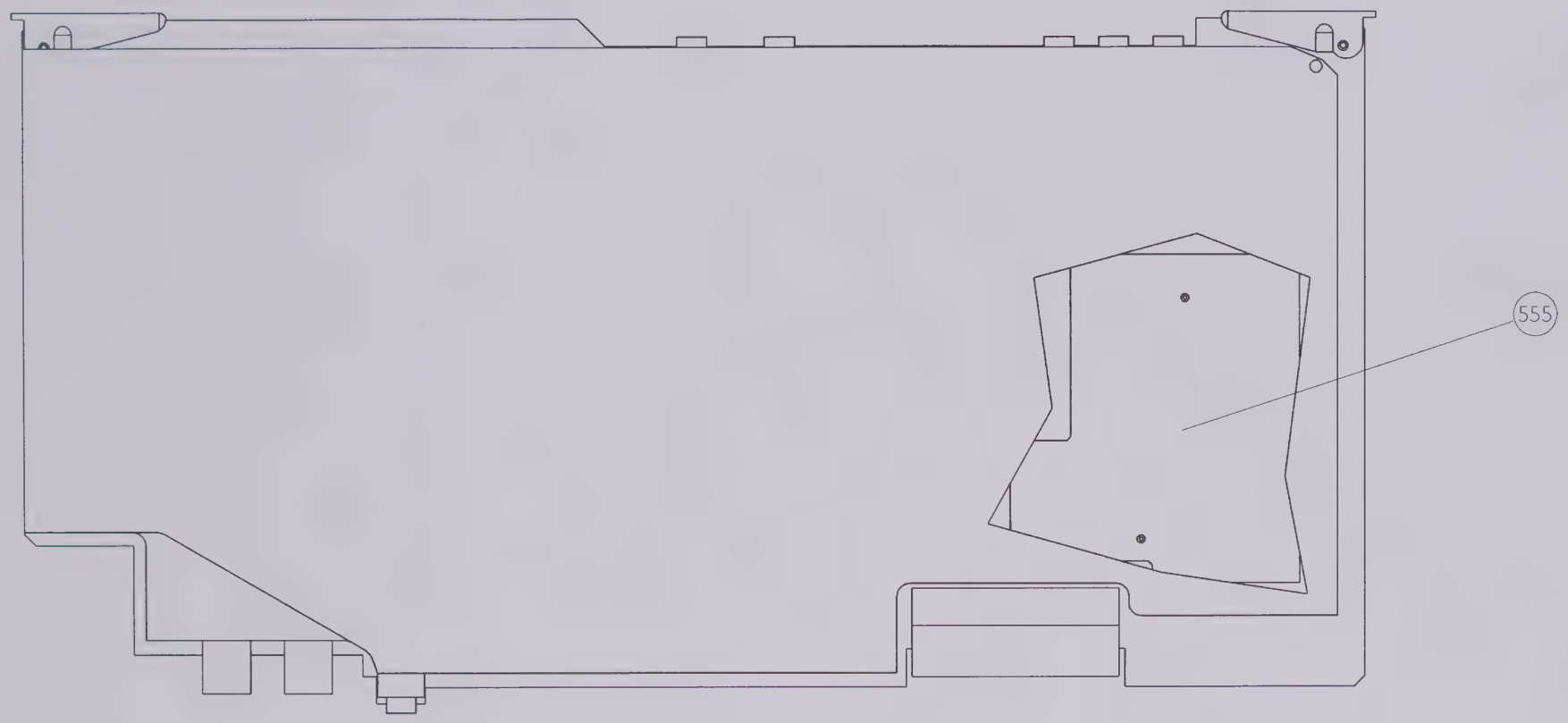

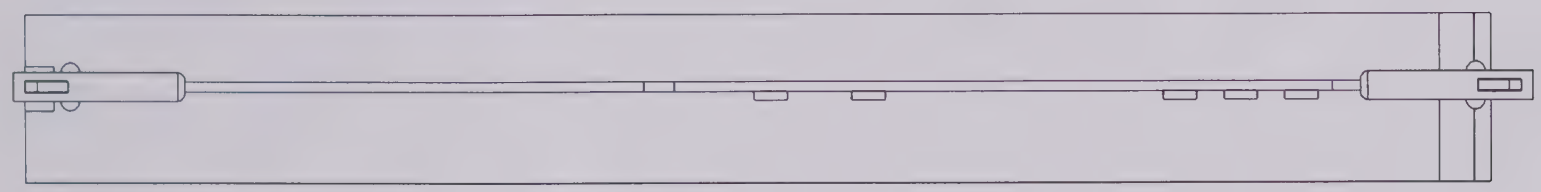

| | | | |
|---|---|---|---|
| | | | 1:1 |
| | | | RX/TX BOARD |
| | ROHDE&SCHWARZ | | 1100.1404.01 D |
| | Zu Gerät CMU | | 1100 0008 01 |

730

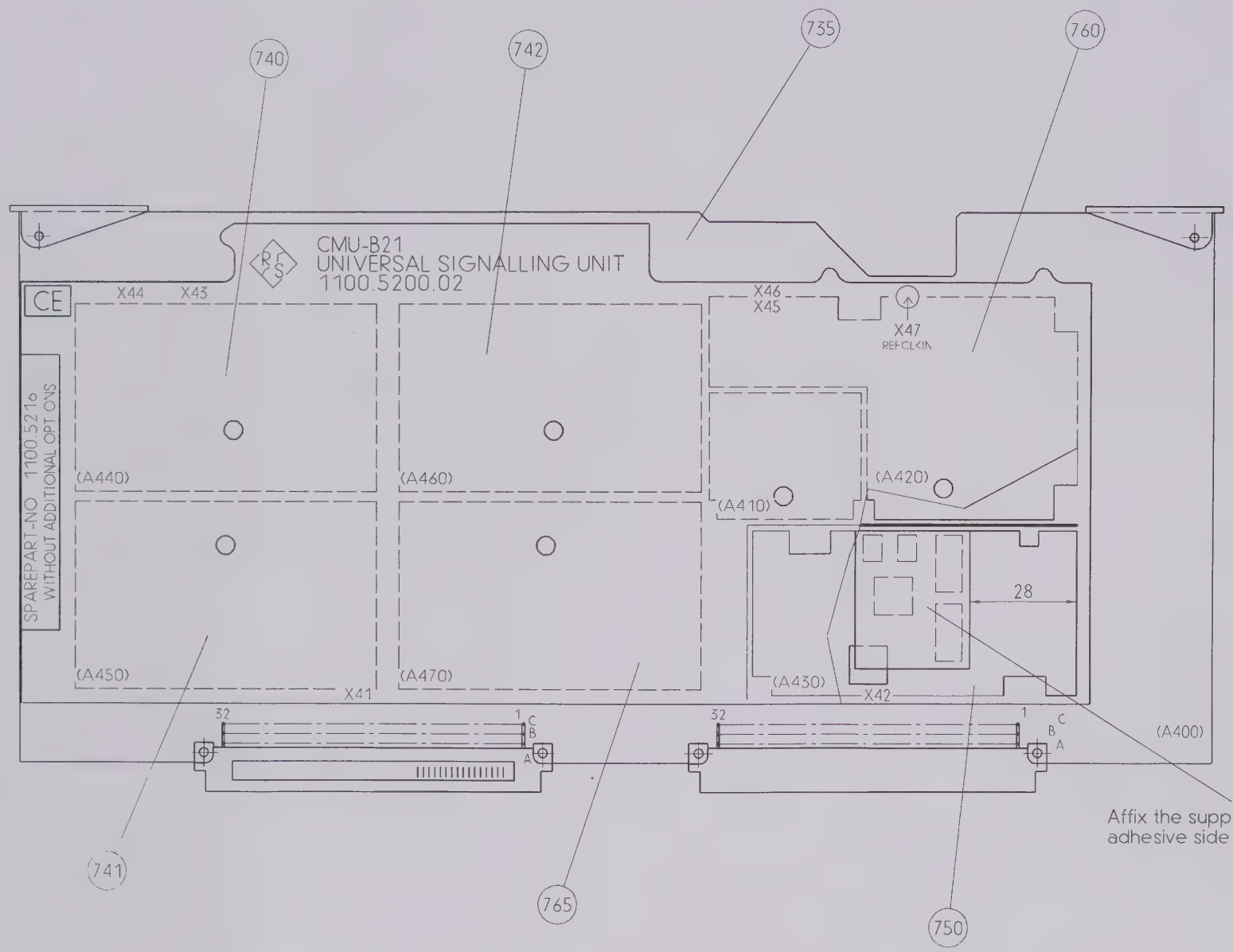


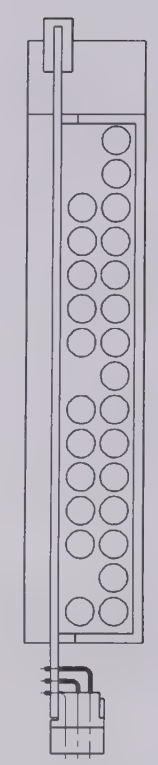

Affix the supplied heat conducting mat with its adhesive side to the sandwich module as shown

| | | |
|---|---|---|
| | Maße ohne Toleranzangabe | Benennung: UNIVERS. SIGN. UNIT |
| | ROHDE&SCHWARZ | Zeichn.-Nr: 1100.5216.01 D |
| | zu Gerät: CMU-B21 | reg. V: 1100.5200.00 |

755

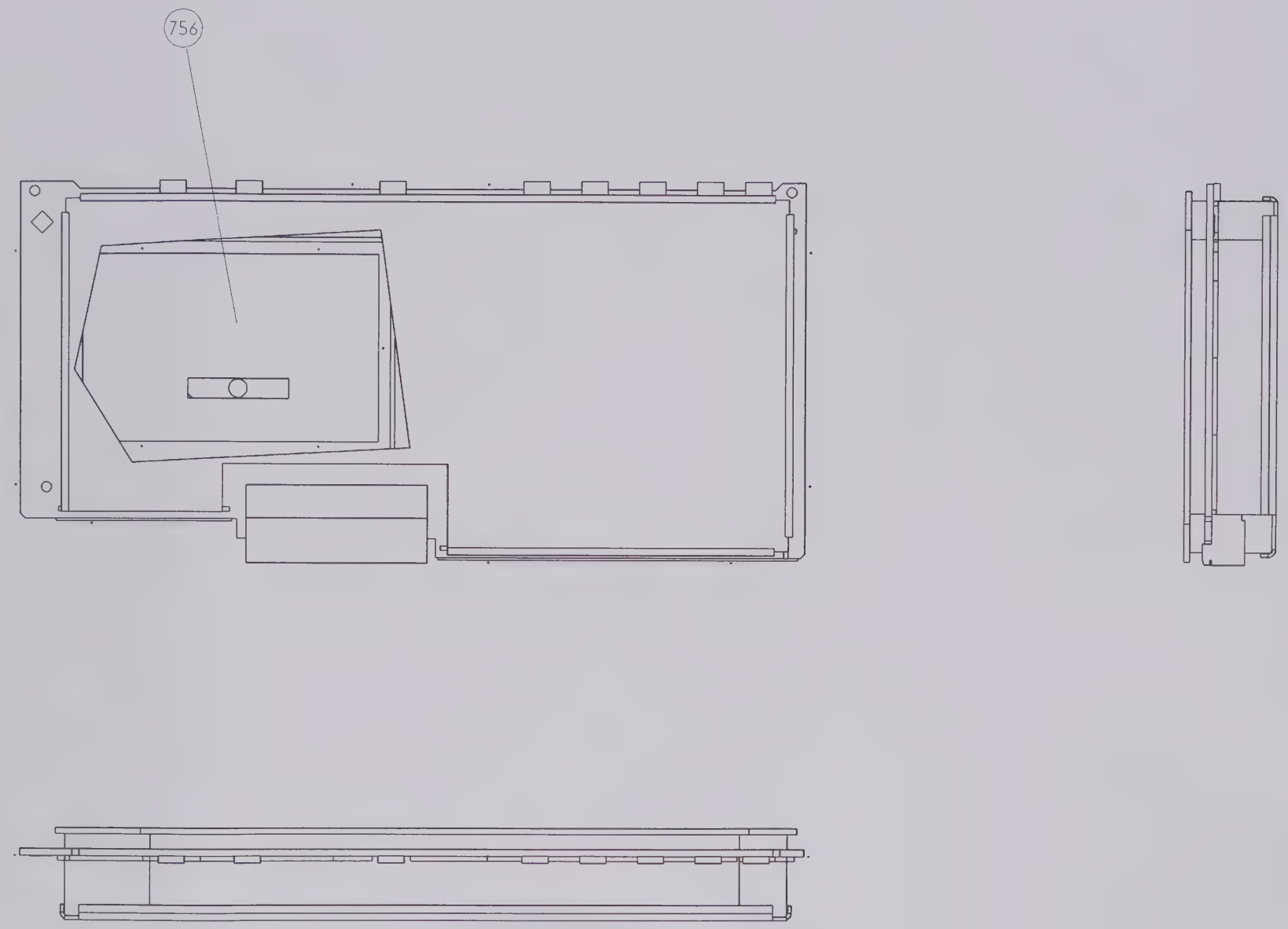


| | | | | | |
|---|---|---|---|---|---|
| | | | | Maße ohne Toleranzangabe | Maßstab 1:1 |
| | | | | | Benennung AUDIO BOARD |
| Änd. Index | Änderungs-Mitteilung | Datum | Name | ROHDE&SCHWARZ | Zeichn.-Nr. 1100.2800.01 D |
| | | | | zu Gerät CMU | reg. V. erste Z. 1100.0008.01 |

ROHDE&SCHWARZ

# Circuit Diagram

# Part List

# Adjustment Devices

# for CMU Basic Unit

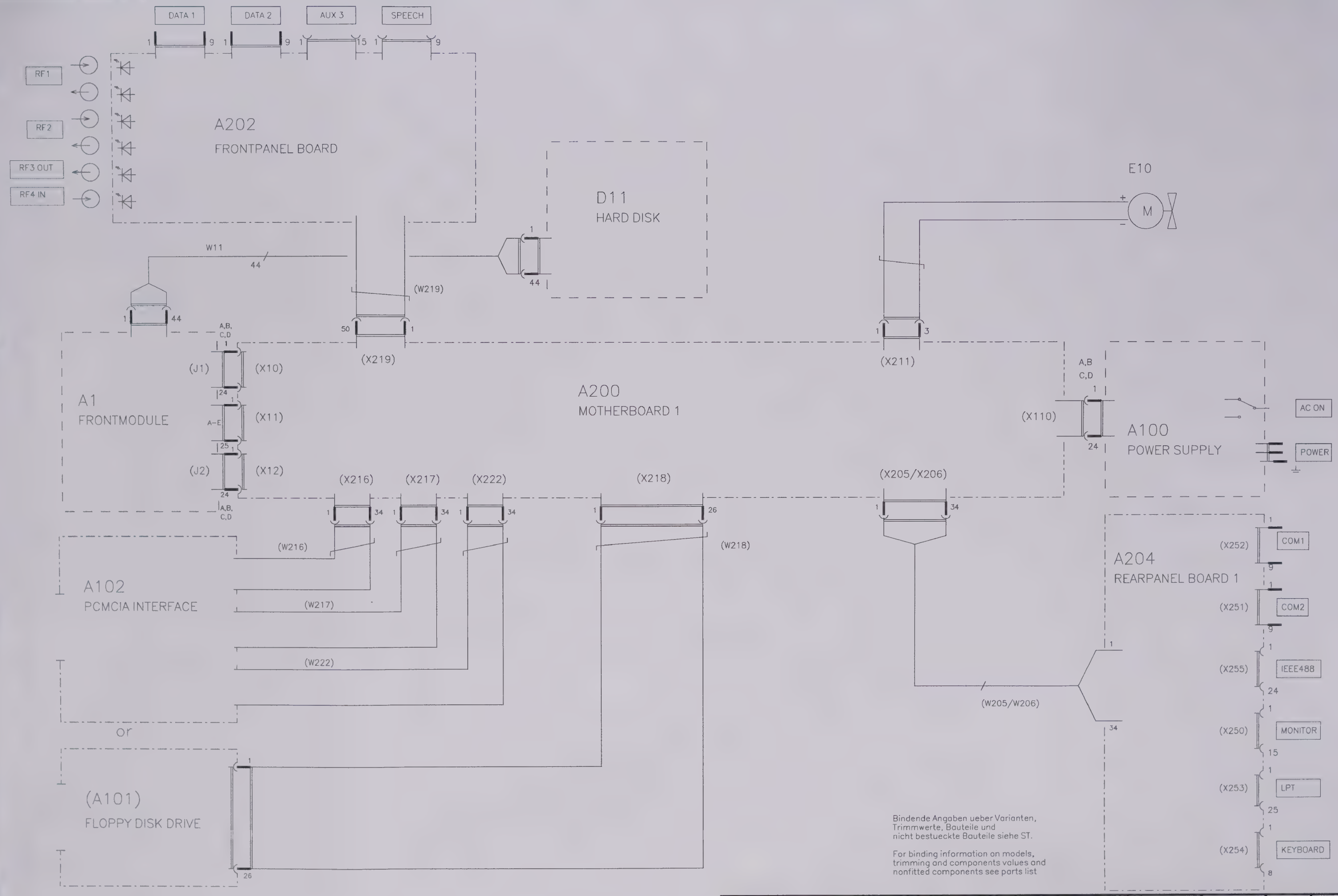


Bindende Angaben ueber Varianten, Trimmwerte, Bauteile und nicht bestueckte Bauteile siehe ST.

For binding information on models, trimming and components values and nonfitted components see parts list

| | | | | | |
|---|---|---|---|---|---|
| ROHDE&SCHWARZ | Benennung: Designation: CMU200 UNIV.RADIOCOM. | | | Sprache: / Lang DE | Aer / C.I 08.00 | Blatt: / Sh. 1+ |
| Typ: Type: CMU200 | Datum: Date: 03-09-09 | Abteilung: Dpt: 1CMK | Name: Name: BERNDT | Zeichn. Nr.: / Drawing No 1100.0008.01 S | |
| 1 Z used in. | | | TOP/TOP.1 | | |

Fuer diese Unterlage behalten wir uns alle Rechte vor
For this document all rights are reserved

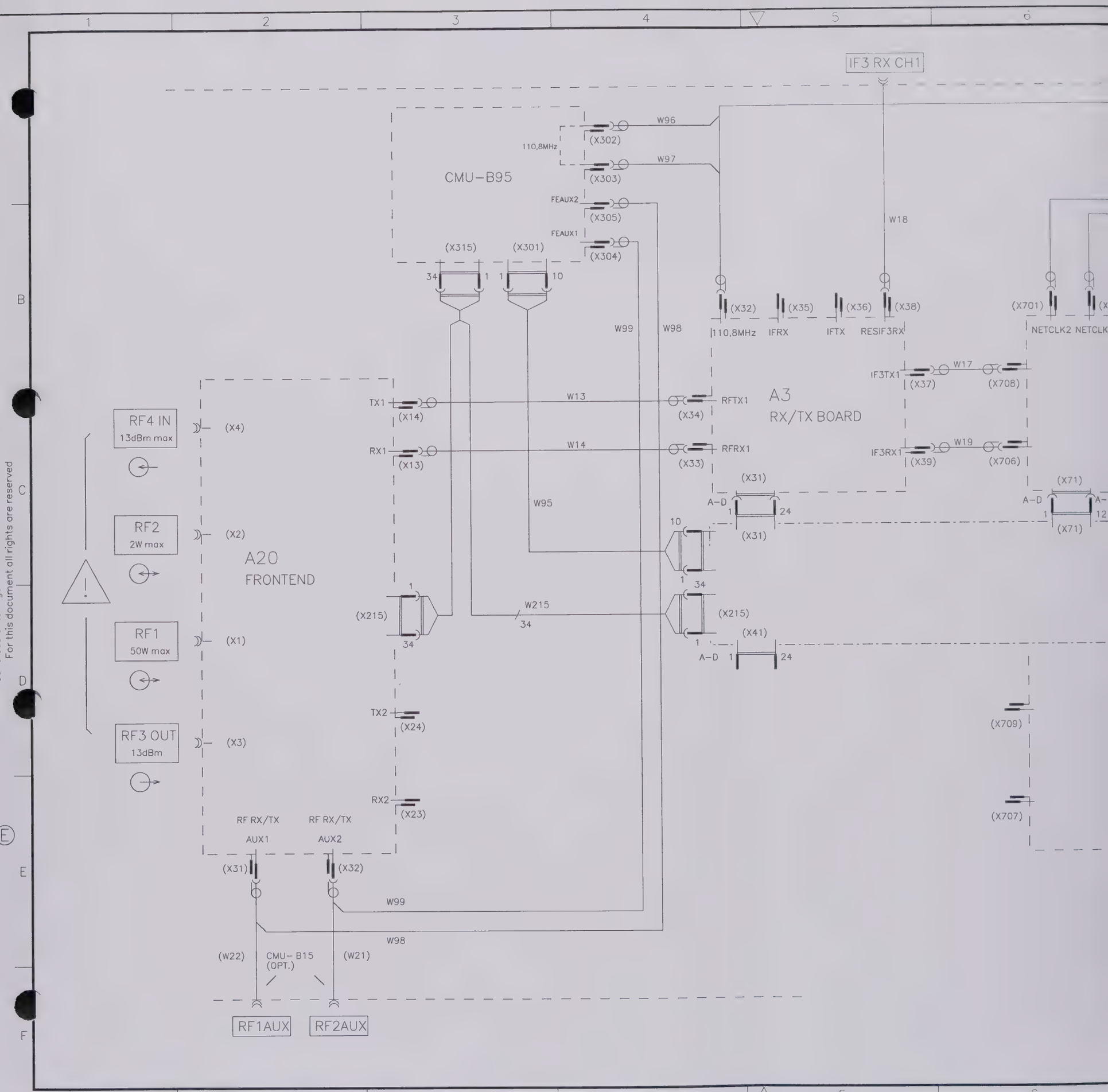


For this document all rights are reserved

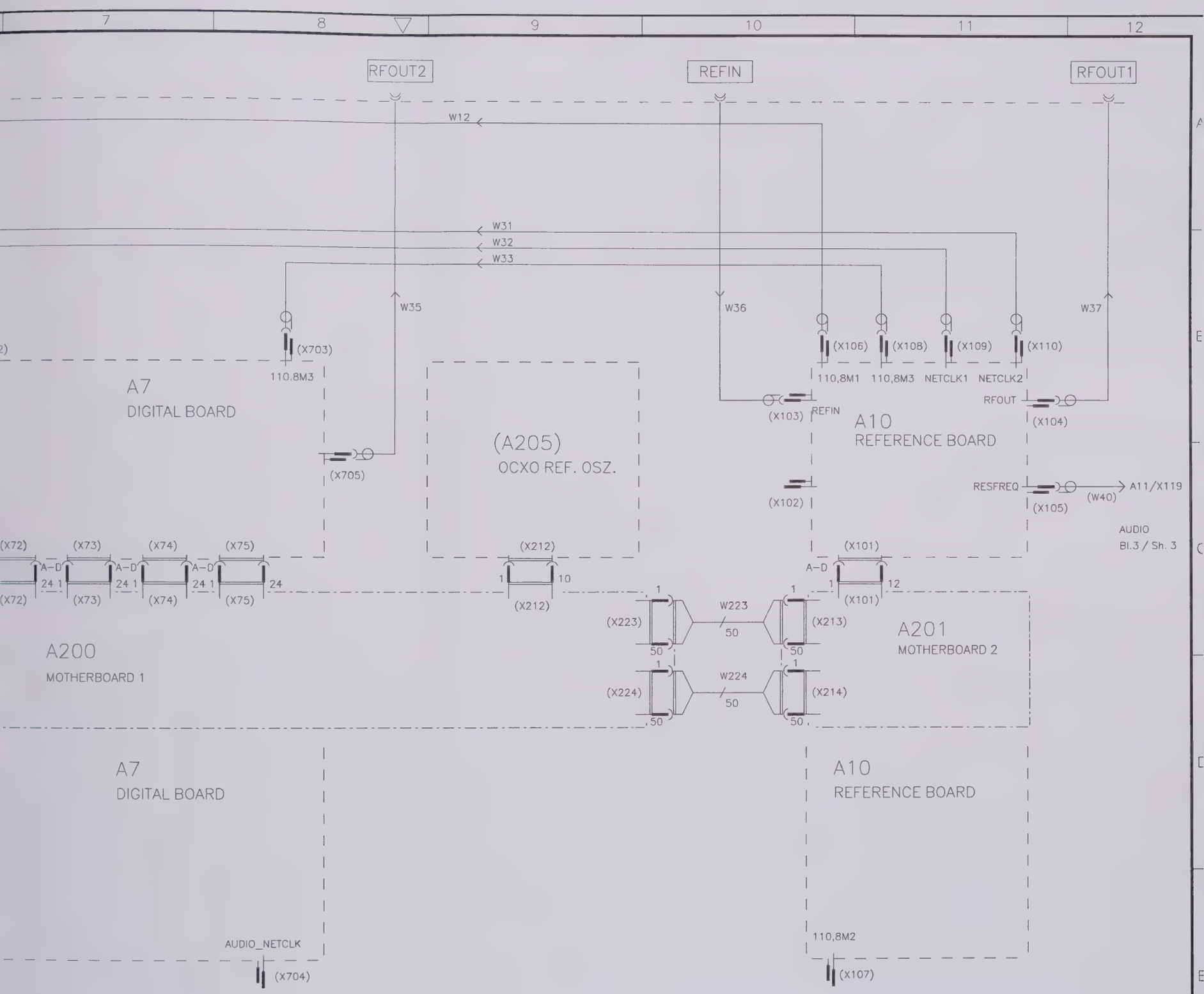


| | | | | | | | |
|---|---|---|---|---|---|---|---|
| ROHDE&SCHWARZ | Benennung: Designation CMU200 UNIV.RADIOCOM. | | | | Sprache: / Lang.: DE | Aei: / C.I.: 08.00 | Blatt: / Sh.: 2+ |
| Typ Type CMU200 | Datum: Date 03–09–09 | Abteilung: Dpt 1CMK | Name: Name BERNDT | | Zeichn. Nr.: / Drawing No.: 1100.0008.01 S | | |
| 1.Z.: | | | | TOP/TOP 2 | | | |

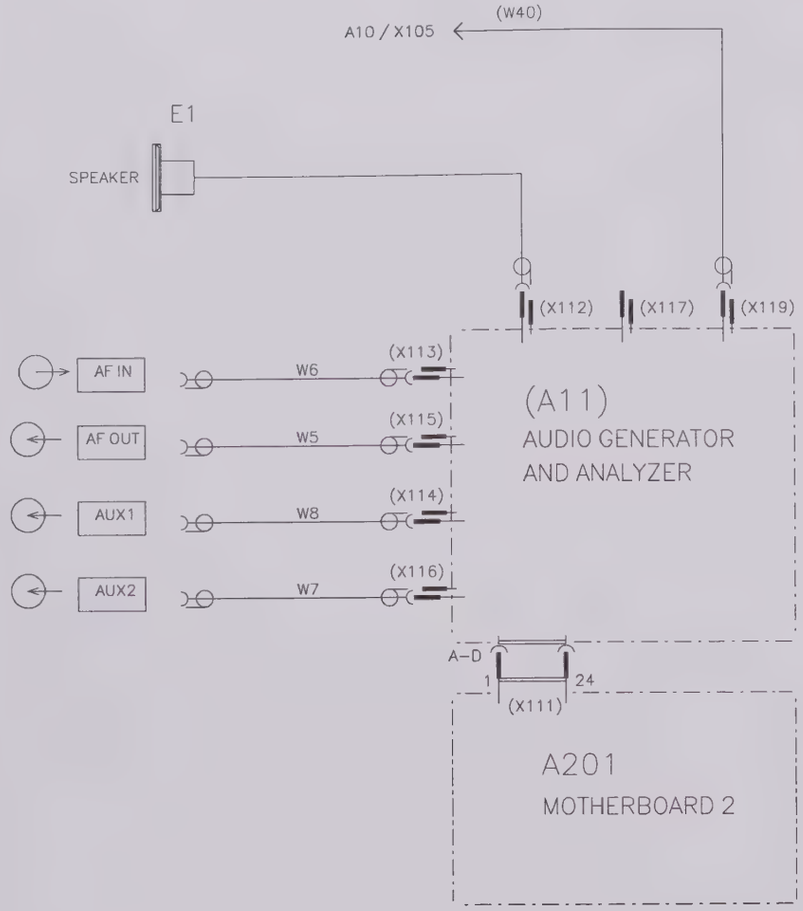


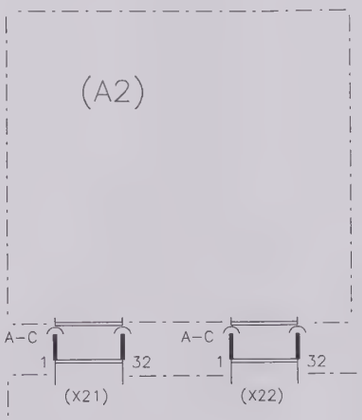


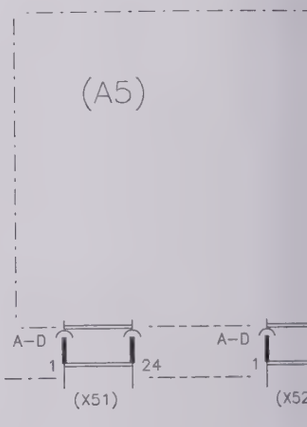


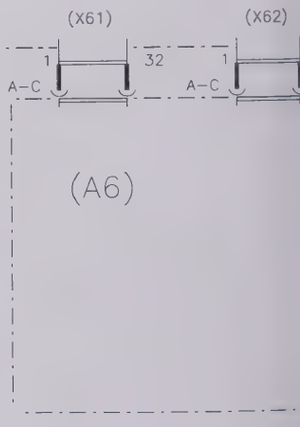


Fuer diese Unterlage behalten wir uns alle Rechte vor
For this document all rights are reserved

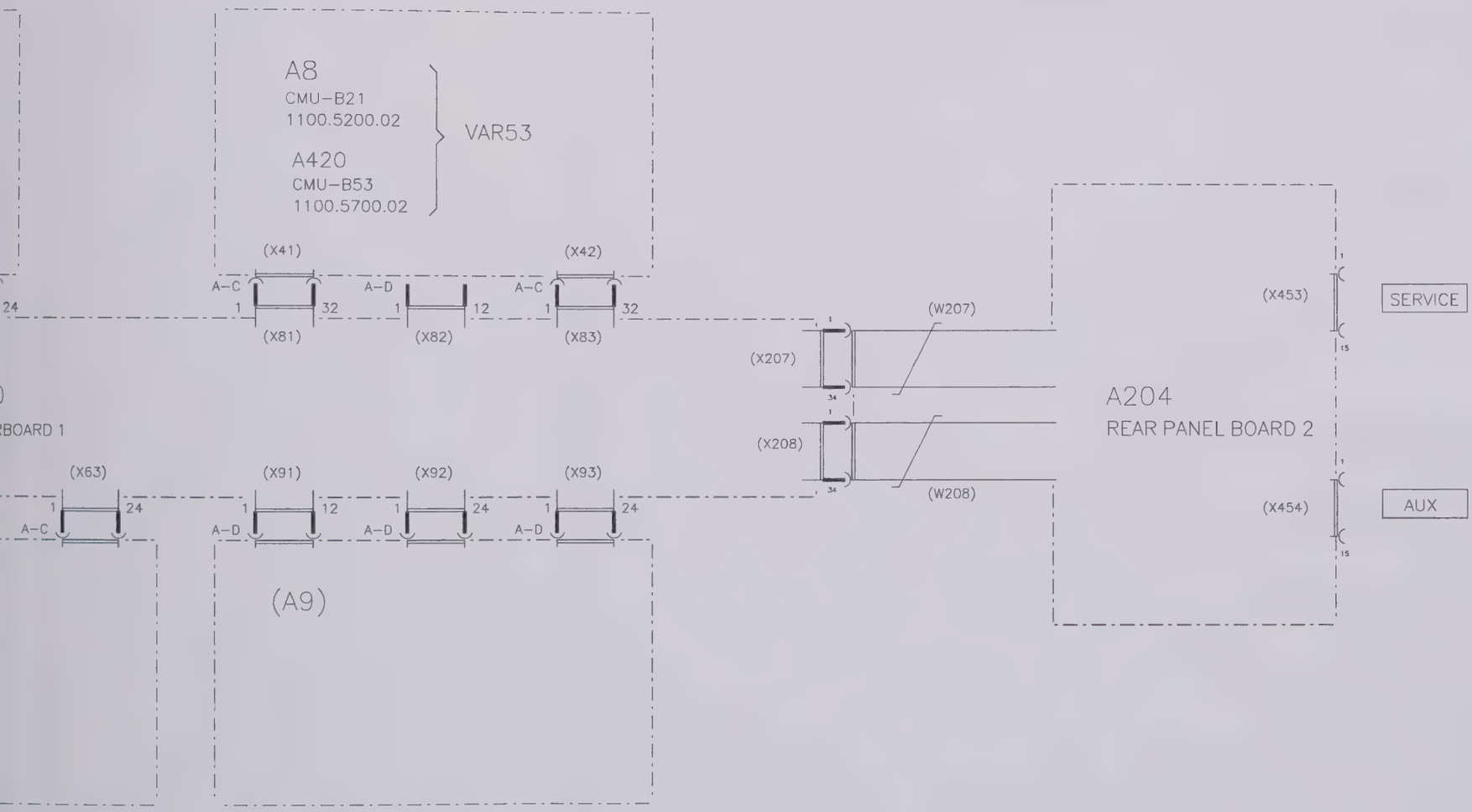


| | | | | | | | |
|---|---|---|---|---|---|---|---|
| ROHDE&SCHWARZ | Benennung: Designation: CMU200 UNIV.RADIOCOM. | | | | Sprache: / Lang.: DE | Aei: / C.I.: 08.00 | Blatt: / Sh.: 3- |
| Typ Type. CMU200 | Datum: Date: 03-09-09 | Abteilung: Dpt: 1CMK | Name: Name: BERNDT | | Zeichn. Nr.: / Drawing No.: 1100.0008.01 S | | |
| 1. Z.: | | | | | | | |

| el. Kennz.<br>*Part* | Benennung<br>*Designation* | Sachnummer<br>*Stock No.* | Hersteller<br>*Manufacturer* | Bezeichnung<br>*Designation* | enthalten in<br>*contained in* |
|---|---|---|---|---|---|
| | ACHTUNG EGB /ATTENTION<br>ESD<br><br>VARIANTENERKLAERUNG<br>VAR02=GRUNDVARIANTE<br>MOD02=BASIC MODEL<br>VAR03=BS TESTER<br>MOD03=BS TESTER<br>VAR53=CMU 200 BLUETOOTH<br>ONLY<br>MOD53=CMU 200 BLUETOOTH<br>ONLY | | | | |
| A1 | ZE FRONTMODUL<br>FRONTMODUL | 1090.9244.23 | | | 1100.0008.01 |
| A3 | EE RX/TX BOARD<br>RX/TX BOARD<br>VAR 02 03 53 | 1135.6925.02 | | | 1100.0008.01 |
| A7 | ZE DIGITALTEIL 2<br>DIGITAL UNIT 2 | 1100.1940.04 | | | 1100.0008.01 |
| A8 | GG CMU-B21 UNIV.SIGN.UNIT<br>CMU-B21 UNIV.SIGN.UNIT<br>VAR 53 | 1100.5200.02 | | | 1100.0008.01 |
| A10 | EE REFERENCE BOARD<br>REFERENCE BOARD | 1100.2600.02 | | | 1100.0008.01 |
| A20 | ED RF_FRONTEND<br>RF FRONTEND | 1100.3120.02 | | | 1100.0008.01 |
| A100 | GJ NETZTEIL 250W UL/CSA<br>POWER SUPPLY | 1091.1982.00 | PULS | | 1100.0008.01 |
| A102 | ED PCMCIA INTERFACE<br>PCMCIA INTERFACE | 1100.5616.02 | | | 1100.0008.01 |
| A200 | ED MOTHERBOARD-SET<br>MOTHERBOARD<br>BESTEHT AUS<br>MB 1 1100.0920.02<br>MB 2 1100.0937.02<br>FP BOARD 1100.0943.02<br>RP BOARD 1 1100.0950.02<br>RP BOARD 2 1100.0966.02 | 1100.0908.02 | | | 1100.0008.01 |
| A400 | EE LINK HANDLER<br>LINK HANDLER | 1097.3570.02 | | | 1100.5216.01 |
| A420 | GG CMU-B53 BLUETOOTH<br>CMU-B53 BLUETOOTH<br>VAR 53 | 1100.5700.02 | | | 1100.0008.01 |
| A430 | EE I/Q OUT MODULE<br>I/Q OUT MODULE | 1100.2000.02 | | | 1100.5216.01 |
| A440 | EE DSP MODUL<br>DSP MODULE<br>VAR 03 | 1097.3129.03 | | | 1100.5216.01 |
| A450 | EE DSP MODUL<br>DSP MODULE<br>VAR 03 | 1097.3129.03 | | | 1100.5216.01 |
| D11 | ZE HARD DISK PROGR. CMU<br>HARD DISK PROGR. CMU | 1100.0989.00 | | | 1100.0008.01 |
| E1 | ZM LAUTSPRECHER<br>LOUDSPEAKER | 1100.0837.00 | | | 1100.0008.01 |
| E10 | ZM LUEFTER<br>BLOWER | 1091.1001.00 | | | 1090.9209.00 |
| W5 | DV HF-KABEL CMU200<br>RF-CABLE | 1100.3894.00 | | | 1100.0008.01 |
| W6 | DV HF-KABEL<br>RF-CABLE | 1100.3907.00 | | | 1100.0008.01 |
| W7 | DV HF-KABEL<br>RF-CABLE | 1100.3913.00 | | | 1100.0008.01 |
| W8 | DV HF-KABEL<br>RF-CABLE | 1100.3920.00 | | | 1100.0008.01 |
| W11 | DY FLACHBANDKABEL W11 | 1091.0734.00 | | | 1100.0008.01 |

Für diese Unterlage behalten wir uns alle Rechte vor.
*For this document all rights reserved*

| el. Kennz. *Part* | Benennung *Designation* | Sachnummer *Stock No.* | Hersteller *Manufacturer* | Bezeichnung *Designation* | enthalten in *contained in* |
|---|---|---|---|---|---|
| | CABLE W11 | | | | |
| W12 | DV HF KABEL<br>RF CABLE | 1100.3965.00 | | | 1100.0008.01 |
| W13 | DW HF–KABEL<br>RF–CABLE | 1100.3971.00 | | | 1100.0008.01 |
| W14 | DW HF–KABEL<br>RF–CABLE | 1100.3988.00 | | | 1100.0008.01 |
| W17 | DV HF KABEL<br>RF CABLE | 1100.4010.00 | | | 1100.0008.01 |
| W18 | DV HF KABEL<br>RF CABLE | 1100.4026.00 | | | 1100.0008.01 |
| W19 | DV HF KABEL<br>RF CABLE | 1100.4032.00 | | | 1100.0008.01 |
| W31 | DV HF KABEL<br>RF CABLE | 1100.4155.00 | | | 1100.0008.01 |
| W32 | DV HF–KABEL<br>RF CABLE | 1100.4161.00 | | | 1100.0008.01 |
| W33 | DV HF–KABEL<br>RF CABLE | 1100.4178.00 | | | 1100.0008.01 |
| W35 | DV HF KABEL<br>RF CABLE | 1100.4190.00 | | | 1100.0008.01 |
| W36 | DV HF KABEL<br>RF CABLE | 1100.4203.00 | | | 1100.0008.01 |
| W37 | DV HF KABEL<br>RF CABLE | 1100.4210.00 | | | 1100.0008.01 |
| W215 | DY KABEL W215<br>CABLE W215 | 1100.1227.00 | | | 1100.0008.01 |
| W223 | DY KABEL W223<br>CABLE W223 | 1100.1233.00 | | | 1100.0008.01 |
| W224 | DY KABEL W224<br>CABLE W224 | 1100.1240.00 | | | 1100.0008.01 |

Für diese Unterlage behalten wir uns alle Rechte vor.
*For this document all rights reserved*

Für dieses Dokument behalten wir uns alle Rechte vor.
For this document all rights are reserved

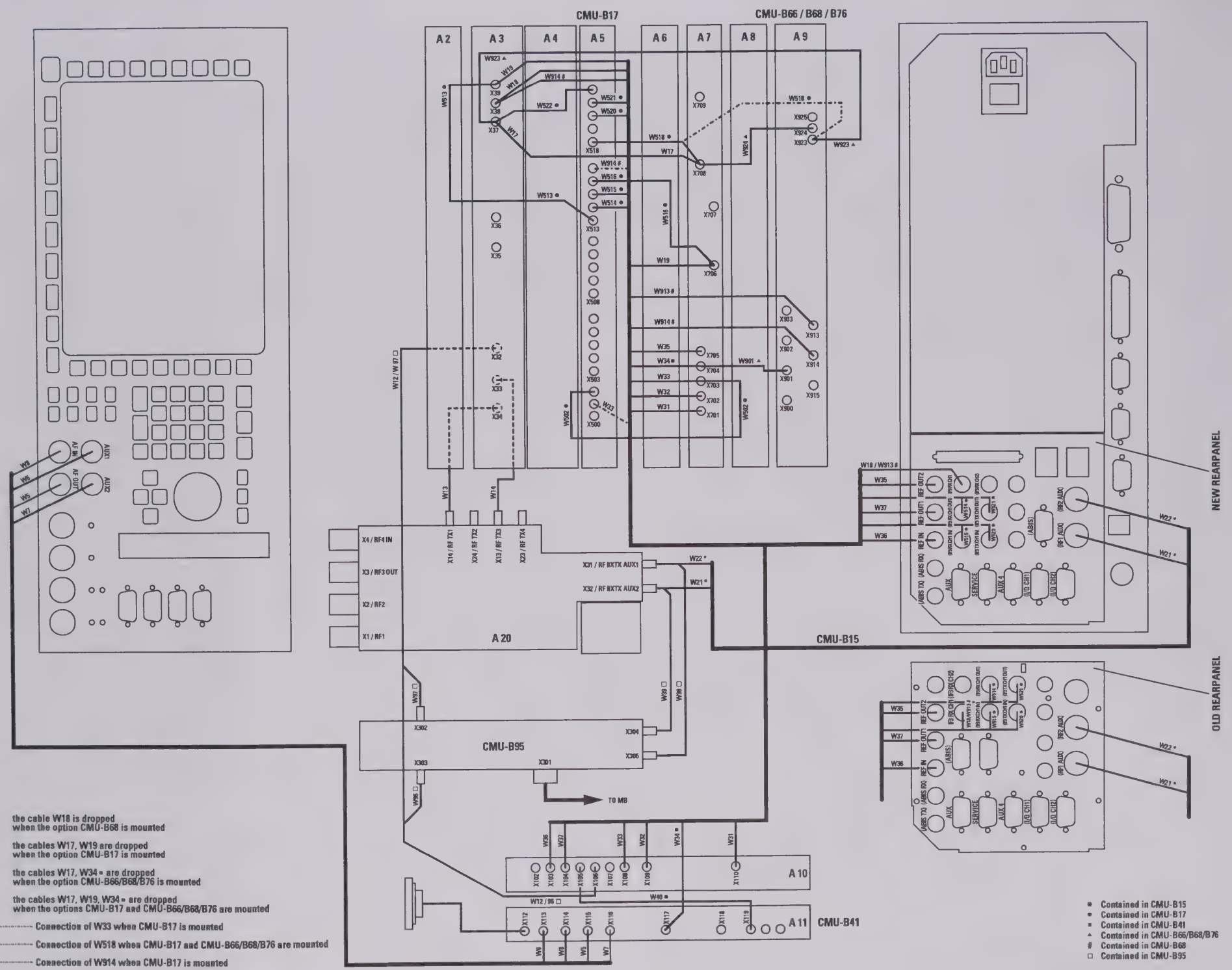


*1100.0872 DV -11- Deckel (bedr.) 1CMK/No. 11.98 08 ----- 12.00 Wb 09 ----- 09.01 Wb 10 ----- 01.03 Wb 11 ----- 09.03 Kg*

*auf Lage achten !*

***Beschriftung: tiefschwarz RAL 9005 (WU 002.2823)***
***hierzu Druckvorlage 1100.0872 DV -11-***
***bearbeitet aus 1091.0657.00***

| | | | |
|---|---|---|---|
| Maßstab: Scale: 1 : 1 | Toleranz: Tol.: | Werkstoff: Material: | |
| ROHDE & SCHWARZ | Benennung: Designation: **Deckel (bedr.)** | | Sprache Lang: de / Ausf. Cl: 11.00 / Blatt Sh: 1 |
| Typ: Type: CMU | | | Zeichn. Nr.: / Drawing No.: **1100.0872.00** D |
| 1. Z.: used in: 1100.0008.01 | Datum: Date: 11.98 | Abteilung: Dept.: 1CMK | Name: Name: Bi |

Projektionsmethode

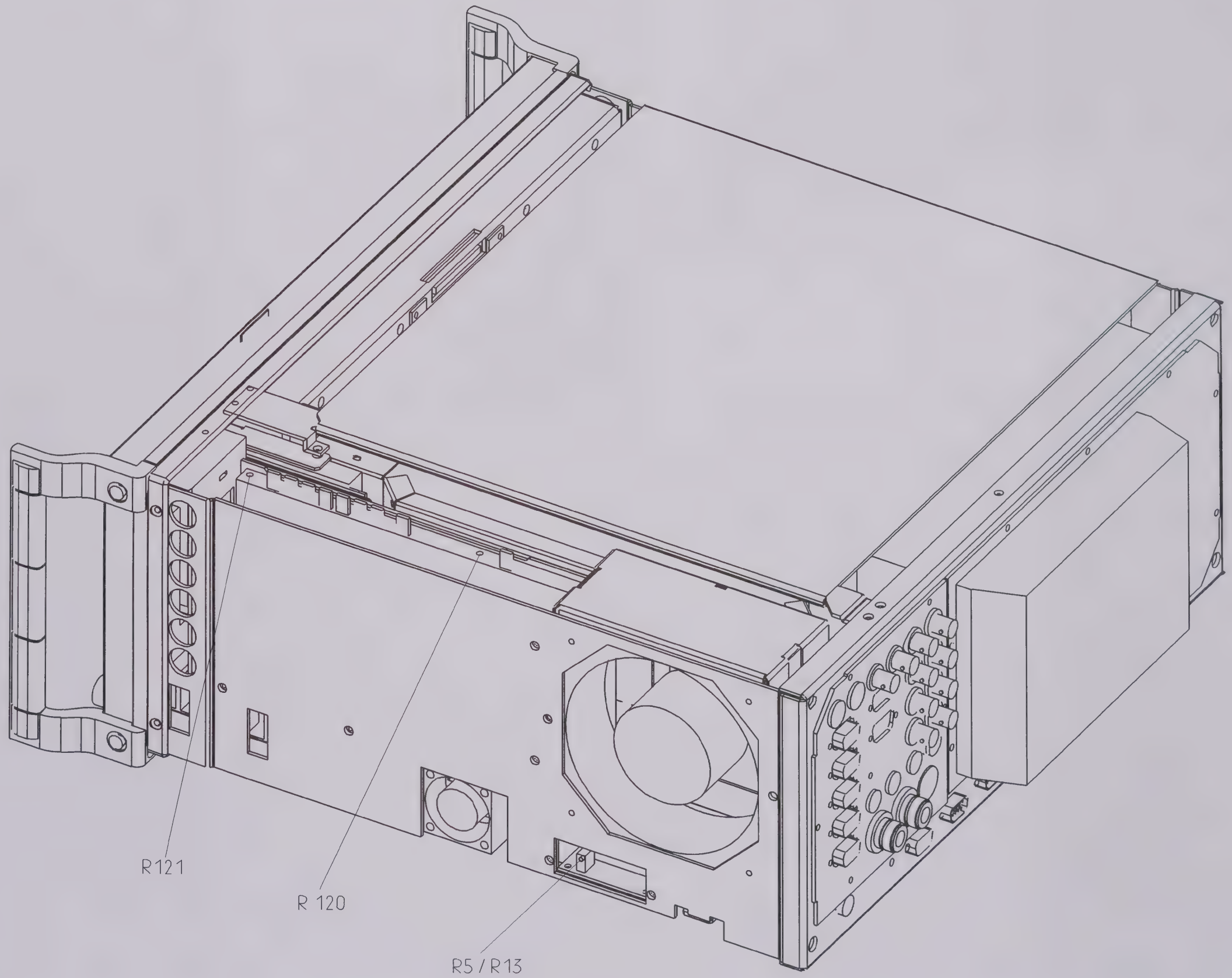


| | | | | | | | | | |
|---|---|---|---|---|---|---|---|---|---|
| 06.00 | | | | CMK | Datum | Name | ROHDE&SCHWARZ | Benennung: GG CMU200 UNIV.RADIOCOM. | 1100.0008.01 D |
| | | | | Bearb | 03.05.99 | Bi | | | |
| | | | | Gepr | | | | | |
| Änd index | Änderungs-Mitteilung | Datum | Name | Norm | | | | | |
| | | | | Plot | | | zu Gerät | | |

Projektion Methode E

| ET 5 | SHEET 6 | SHEET 7+8 | SHEET 9 |
|---|---|---|---|
| ST /<br>DDEMOD<br>REQ | X61, X62, X63 — UNIVERSAL SIGN. UNIT 2 | X71, X72, X73, X74, X75 — DIGITAL BOARD | X81, X82, X83 — UNIVERSAL SIGN. UNIT 1 |

| ET 13 | SHEET 14 | SHEET 15 | SHEET 16 |
|---|---|---|---|
| PANEL | X205, X206 — REAR PANEL BOARD 1 | X200 — ABISSYM 1/2 | X223, X224 — MOTHERBOARD 1 1/2 CONNECTOR |
| BOARD | | X209, X210, X211, X220, X225 — FAN | |
| ND | X207, X208 — REAR PANEL BOARD 2 | | X213, X214 — MOTHERBOARD 2 1/2 CONNECTOR |
| ET 20 | | X201, X202 — ABISASYM2 | X221 — +5VREF |
| ANEL<br>2 | | X203, X204 — ABISASYM1 | |
| | | X110 — POWER SUPPLY | |

Bindende Angaben ueber Varianten,
Trimmwerte, Bauteile und
nicht bestueckte Bauteile siehe SA.

FOR BINDING INFORMATION ON MODELS,
TRIMMING AND COMPONENTS VALUES AND
NONFITTED COMPONENTS SEE PARTS LIST

ACHTUNG: EGB !
ELEKTROSTATISCH GEFAEHRDETE
BAUELEMENTE ERFORDERN EINE
BESONDERE HANDHABUNG
ATTENTION ESD !
ELECTROSTATIC SENSITIVE DEVICES
REQUIRE A SPECIAL HANDLING

| | | | | | | | |
|---|---|---|---|---|---|---|---|
| ROHDE&SCHWARZ | Benennung / Designation: MOTHERBOARD-SET | | | | Sprache: / Lang.: DE | Aei / CI 02.02 | Blatt / Sh 1+ |
| Typ: / Type: | Datum: / Date: 02-01-25 | Abteilung / Dpt: 1CMK | Name: / Name: BERNDT | | Zeichn. Nr.: / Drawing No.: 1100.0908.01 S | | |
| 1 Z used in 1100.0008.01 | | | | TOP/TOP.1 | | | |

## SHEET 2

X10, X11, X12 — FRONT MODULE CONTROLLER

## SHEET 3

X21, X22 — E1–T1/ DUT–SUPPLY BOARD

## SHEET 4

X31 — RX/TX BOARD 1

X41 — RX/TX BOARD 2

## SHE

X51, X52 — A/B T
IQ–MO
/LOW
BOARD

## SHEET 10

X91, X92 — USU1 CO–PROCESSOR

## SHEET11

X93 — USU1 CO–PROCESSOR

ISA– TERMINATION

## SHEET 12

X216, X217, X222 — PC CARD

BUFFERS

## SHE

X219 — FRONT
BOARD

X212 — OCXO

X218 — FLOPP

X215 — FRONT
BOARD

## SHEET 17

### MOTHERBOARD 2

X101 — REFERENZ BOARD

X111 — AUDIO BOARD

## SHEET18

### REAR PANEL BOARD 1

X253 — LPT

X255 — IEC 625 / IEEE 488

X250 — MONITOR

X252 — COM 1

X251 — COM 2

X254 — KEYBOARD

## SHEET 19

### FRONT PANEL BOARD

X303 — AUX 3

X304 — SPEECH

X301 — DATA 1

X302 — DATA 2

## SHE

### REAR P
### BOARD

X451 — SERVIC

X450 — AUX

X452 — AUX 4

X453 — I/Q 1

X454 — I/Q 2

For this document all rights are reserved

Fuer diese Unterlage behalten wir uns alle Rechte vor
For this document all rights are reserved

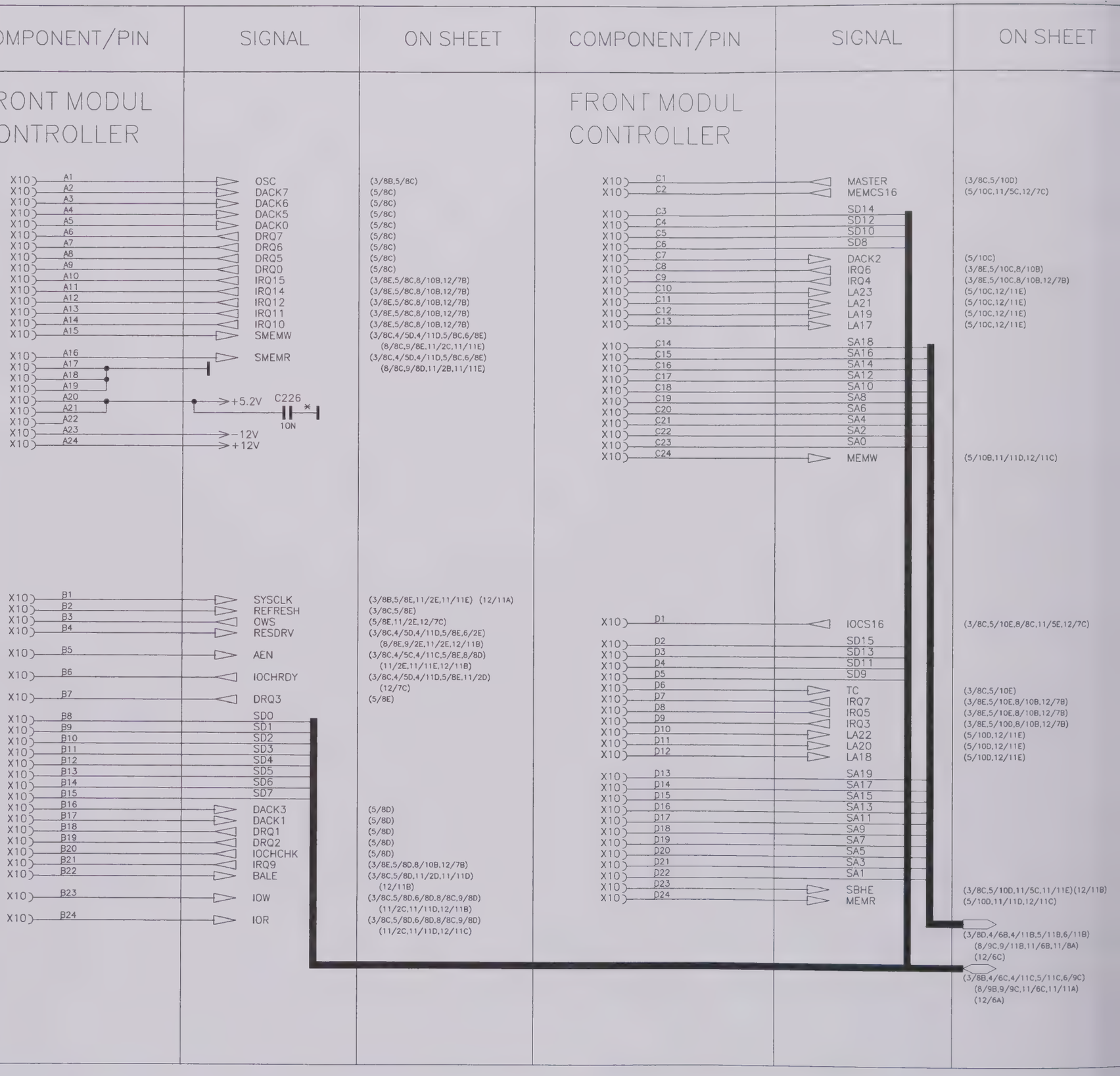

# DEFINITIONS MB1

| COMPONENT/PIN | SIGNAL | ON SHEET | COMPONENT/PIN | SIGNAL | ON SHEET |
|---|---|---|---|---|---|
| **FRONT MODUL CONTROLLER** | | | **FRONT MODUL CONTROLLER** | | |
| X12 A1 | GREEN | (14/2F,14/5C) | X12 C1 | DSR1 | (14/5C) |
| X12 A2 | RED | (14/2F,14/5D) | X12 C2 | TXD1 | (14/5C) |
| X12 A3 | HSYNC | (14/2F,14/5C) | X12 C3 | RI1 | (14/5C) |
| X12 A4 | VSYNC | (14/2F,14/5C) | X12 C4 | BUSY | (14/2C) |
| X12 A5 | OT | (15/11B) | X12 C5 | PD6 | (14/2C) |
| X12 A6 | BD (n.c.) | | X12 C6 | PD3 | (14/2C) |
| X12 A7 | BIU (n.c.) | | X12 C7 | INIT | (14/2C) |
| X12 A8 | | | X12 C8 | PD0 | (14/2C) |
| X12 A9 | | | X12 C9 | ATN | (14/2C) |
| X12 A10 | STBREL (n.c.) | | X12 C10 | NDAC | (14/2C) |
| X12 A11 | +5.2V C227 * | | X12 C11 | EOI | (14/2B) |
| X12 A12 | 10N | | X12 C12 | D7 | (14/2B) |
| X12 A13 | | | X12 C13 | D1 | (14/2B) |
| X12 A14 | | | X12 C14 | D4 | (14/2B) |
| X12 A15 | IRQ18 | (8/10C) | X12 C15 | RXD2 | (14/5C) |
| X12 A16 | IRQ19 | (8/10C) | X12 C16 | CTS2 | (14/5B) |
| X12 A17 | | | X12 C17 | KEYDAT | (14/5B) |
| X12 A18 | | | X12 C18 | MSDAT | (14/5B) |
| X12 A19 | IRQ17 | (8/10C) | X12 C19 | DS2 | (13/8D) |
| X12 A20 | +5.2V | | X12 C20 | DIRC | (13/8D) |
| X12 A21 | | | X12 C21 | WE | (13/8D) |
| X12 A22 | IRQ16 | (8/10B) | X12 C22 | RDD | (13/8E) |
| X12 A23 | -12V | | X12 C23 | +12VSTANDBY | (13/8B,15/9E,15/11D,16/2C) |
| X12 A24 | +12V | | X12 C24 | SCL (n.c.) | |
| X12 B1 | BLUE | (14/2F,14/5C) | X12 D1 | RXD1 | (14/5C) |
| X12 B2 | DCD1 | (14/5C) | X12 D2 | CTS1 | (14/5C) |
| X12 B3 | RTS1 | (14/5C) | X12 D3 | SLCT | (14/2C) |
| X12 B4 | DTR1 | (14/5C) | X12 D4 | ACK | (14/2C) |
| X12 B5 | PE | (14/2C) | X12 D5 | PD5 | (14/2C) |
| X12 B6 | PD7 | (14/2C) | X12 D6 | SLIN | (14/2C) |
| X12 B7 | PD4 | (14/2C) | X12 D7 | PD1 | (14/2C) |
| X12 B8 | PD2 | (14/2C) | X12 D8 | AFD | (14/2D) |
| X12 B9 | ERR | (14/2C) | X12 D9 | SRQ | (14/2C) |
| X12 B10 | STB | (14/2D) | X12 D10 | NRFD | (14/2B) |
| X12 B11 | IFC | (14/2C) | X12 D11 | REN | (14/2B) |
| X12 B12 | DAV | (14/2B) | X12 D12 | D2 | (14/2B) |
| X12 B13 | D3 | (14/2B) | X12 D13 | D5 | (14/2B) |
| X12 B14 | D6 | (14/2B) | X12 D14 | DCD2 | (14/5C) |
| X12 B15 | D0 | (14/2B) | X12 D15 | RTS2 | (14/5B) |
| X12 B16 | DSR2 | (14/5C) | X12 D16 | DTR2 | (14/5B) |
| X12 B17 | TXD2 | (14/5B) | X12 D17 | MSCLK | (14/5B) |
| X12 B18 | RI2 | (14/5B) | X12 D18 | DCHG | (13/8D) |
| X12 B19 | KEYCLK | (14/5B) | X12 D19 | STEP | (13/8D) |
| X12 B20 | IDX | (13/8C) | X12 D20 | TRK0 | (13/8D) |
| X12 B21 | MO2 | (13/8D) | X12 D21 | HS | (13/8E) |
| X12 B22 | WD | (13/8D) | X12 D22 | SPKR (n.c.) | |
| X12 B23 | WP | (13/8E) | X12 D23 | PWGOOD | (15/11C) |
| X12 B24 | ONOFF | (15/8C) | X12 D24 | SDA (n.c.) | |

X11 A1 → +5.2V; A2; A3; A4; A5; A6; A7; A8; A9; A10; A11

X11 A15; A16; A17; A18; A19; A20; A21; A22; A23; A24; A25 → +5.2V

X11 B1 → -12V; B2 → +5.2V; B3; B4; B5; B6; B7; B8; B9; B10; B11

X11 B15; B16; B17; B18; B19; B20; B21; B22; B23; B24 → +5.2V; B25

X11 C1; C2; C3; C4; C5; C6; C7; C8; C9; C10; C11

X11 C15; C16; C17; C18; C19; C20; C21; C22; C23; C24; C25

X11 D1 → +12V; D2; D3 → +5.2V; D4; D5; D6; D7; D8; D9; D10; D11

X11 D15; D16; D17; D18; D19; D20; D21; D22; D23 → +5.2V; D24; D25

X11 E1 → +5.2V; C228 10N; E2; E3; E4; E5; E6; E7; E8; E9; E10; E11

X11 E15; E16; E17; E18; E19; E20; E21; E22; E23; E24; E25 → +5.2V

| | | | | | |
|---|---|---|---|---|---|
| ROHDE&SCHWARZ | Benennung: MOTHERBOARD-SET | | | Sprache: / Lang.: DE | Aei / C I 02.02 | Blatt / Sh. 2+ |
| Typ Type | Datum: Date: 02-01-25 | Abteilung: Dpt: 1CMK | Name: BERNDT | Zeichn. Nr.: / Drawing No.: 1100.0908.01 S | | |
| 1. Z used in 1100.0008.01 | | | TOP/TOP.2 | | | |

| COMPONENT/PIN | SIGNAL | ON SHEET | COMPONENT/PIN | SIGNAL | ON SHEET |
|---|---|---|---|---|---|
| E1-T1/ DUT-SUPPLY BOARD | | | E1-T1/ DUT-SUPPLY BOARD | | |

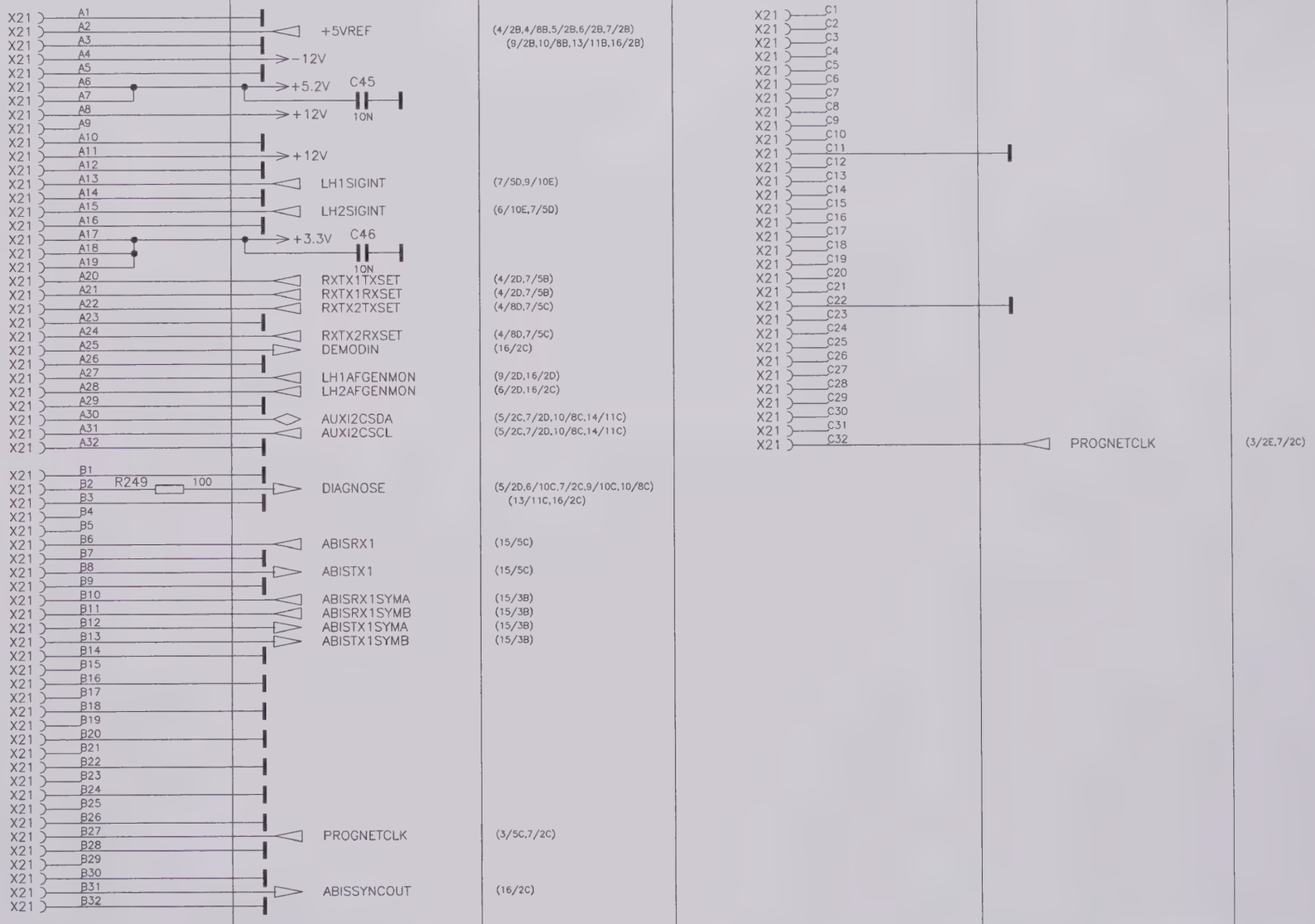


Fuer diese Unterlage behalten wir uns alle Rechte vor
For this document all rights are reserved

# DEFINITIONS MB1

| COMPONENT/PIN | SIGNAL | ON SHEET |
|---|---|---|
| **E1–T1/ DUT–SUPPLY BOARD** | | |
| X22 A1 | | |
| X22 A2 | SYSCLK | (2/2D,5/8E,11/2E,11/11E) (12/11A) |
| X22 A3 | OSC | (2/2B,5/8C) |
| X22 A4 | SD0 | (2/6F,4/6C,4/11C,5/11C,6/9C) (8/9B,9/9C,11/6C,11/11A) (12/6A) |
| X22 A5 | SD1 | |
| X22 A6 | SD2 | |
| X22 A7 | SD3 | |
| X22 A8 | SD4 | |
| X22 A9 | SD5 | |
| X22 A10 | SD6 | |
| X22 A11 | SD7 | |
| X22 A12 | SD8 | |
| X22 A13 | SD9 | |
| X22 A14 | SD10 | |
| X22 A15 | SD11 | |
| X22 A16 | SD12 | |
| X22 A17 | SD13 | |
| X22 A18 | SD14 | |
| X22 A19 | SD15 | |
| X22 A20 | IOCHRDY | (2/2D,4/5D,4/11D,5/8E,11/2D)(12/7C) |
| X22 A21 | AEN | (2/2D,4/5C,4/11C,5/8E,8/8D) (11/2E,11/11E,12/11B) |
| X22 A22 | RESDRV | (2/2D,4/5D,4/11D,5/8E,6/2E) (8/8E,9/2E,11/2E,12/11B) |
| X22 A23 | IOW | (2/2E,5/8D,6/8D,8/8C,9/8D) (11/2C,11/11D,12/11B) |
| X22 A24 | IOR | (2/2E,5/8D,6/8D,8/8C,9/8D) (11/2C,11/11D,12/11C) |
| X22 A25 | SMEMR | (2/2C,4/5D,4/11D,5/8C,6/8E) (8/8C,9/8D,11/2B,11/11E) |
| X22 A26 | SMEMW | (2/2C,4/5D,4/11D,5/8C,6/8E) (8/8C,9/8E,11/2C,11/11E) |
| X22 A27 | BALE | (2/2E,5/8D,11/2D,11/11D) (12/11B) |
| X22 A28 | IOCS16 | (2/5D,5/10E,8/8C,11/5E,12/7C) |
| X22 A29 | TC | (2/5D,5/10E) |
| X22 A30 | SBHE | (2/5E,5/10D,11/5C,11/11E)(12/11B) |
| X22 A31 | REFRESH | (2/2D,5/8E) |
| X22 A32 | MASTER | (2/5B,5/10D) |
| X22 B1 | SA0 | (2/6E,4/6B,4/11B,5/11B,6/11B) (8/9C,9/11B,11/6B,11/8A) (12/6C) |
| X22 B2 | SA1 | |
| X22 B3 | SA2 | |
| X22 B4 | SA3 | |
| X22 B5 | SA4 | |
| X22 B6 | SA5 | |
| X22 B7 | SA6 | |
| X22 B8 | SA7 | |
| X22 B9 | SA8 | |
| X22 B10 | SA9 | |
| X22 B11 | SA10 | |
| X22 B12 | SA11 | |
| X22 B13 | SA12 | |
| X22 B14 | SA13 | |
| X22 B15 | SA14 | |
| X22 B16 | SA15 | |
| X22 B17 | SA16 | |
| X22 B18 | SA17 | |
| X22 B19 | SA18 | |
| X22 B20 | SA19 | |
| X22 B21 | IRQ3 | (2/5D,5/10D,8/10B,12/7B) |
| X22 B22 | IRQ4 | (2/5B,5/10C,8/10B,12/7B) |
| X22 B23 | IRQ5 | (2/5D,5/10E,8/10B,12/7B) |
| X22 B24 | IRQ6 | (2/5B,5/10C,8/10B) |
| X22 B25 | IRQ7 | (2/5D,5/10E,8/10B,12/7B) |
| X22 B26 | IRQ9 | (2/2E,5/8D,8/10B,12/7B) |
| X22 B27 | IRQ10 | (2/2C,5/8C,8/10B,12/7B) |
| X22 B28 | IRQ11 | (2/2C,5/8C,8/10B,12/7B) |
| X22 B29 | IRQ12 | (2/2B,5/8C,8/10B,12/7B) |
| X22 B30 | IRQ14 | (2/2B,5/8C,8/10B,12/7B) |
| X22 B31 | IRQ15 | (2/2B,5/8C,8/10B,12/7B) |
| X22 B32 | | |

| COMPONENT/PIN | SIGNAL | ON SHEET |
|---|---|---|
| **E1–T1/ DUT–SUPPLY BOARD** | | |
| X22 C1 | ABISTX2SYMB | (15/3B) |
| X22 C2 | ABISTX2SYMA | (15/3B) |
| X22 C3 | ABISRX2SYMB | (15/3B) |
| X22 C4 | ABISRX2SYMA | (15/3B) |
| X22 C5 | | |
| X22 C6 | ABISTX2 | (15/5B) |
| X22 C7 | | |
| X22 C8 | ABISRX2 | (15/5B) |
| X22 C9 | | |
| X22 C10 | | |
| X22 C11 | | |
| X22 C12 | | |
| X22 C13 | | |
| X22 C14 | | |
| X22 C15 | | |
| X22 C16 | | |
| X22 C17 | | |
| X22 C18 | | |
| X22 C19 | | |
| X22 C20 | | |
| X22 C21 | | |
| X22 C22 | | |
| X22 C23 | | |
| X22 C24 | | |
| X22 C25 | | |
| X22 C26 | | |
| X22 C27 | | |
| X22 C28 | | |
| X22 C29 | | |
| X22 C30 | | |
| X22 C31 | | |
| X22 C32 | | |

| | | | | | | | |
|---|---|---|---|---|---|---|---|
| ROHDE&SCHWARZ | Benennung: / Designation: MOTHERBOARD–SET | | | | Sprache: / Lang.: DE | Aei / CI: 02.02 | Blatt / Sh: 3+ |
| Typ / Type | Datum: / Date: 02–01–25 | Abteilung: / Dpt: 1CMK | Name: / Name: BERNDT | | Zeichn. Nr.: / Drawing No.: 1100.0908.01 S | | |
| T. Z.: / used in: 1100.0008.01 | TOP/TOP.3 | | | | | | |

Für diese Unterlage behalten wir uns alle Rechte vor
For this document all rights are reserved

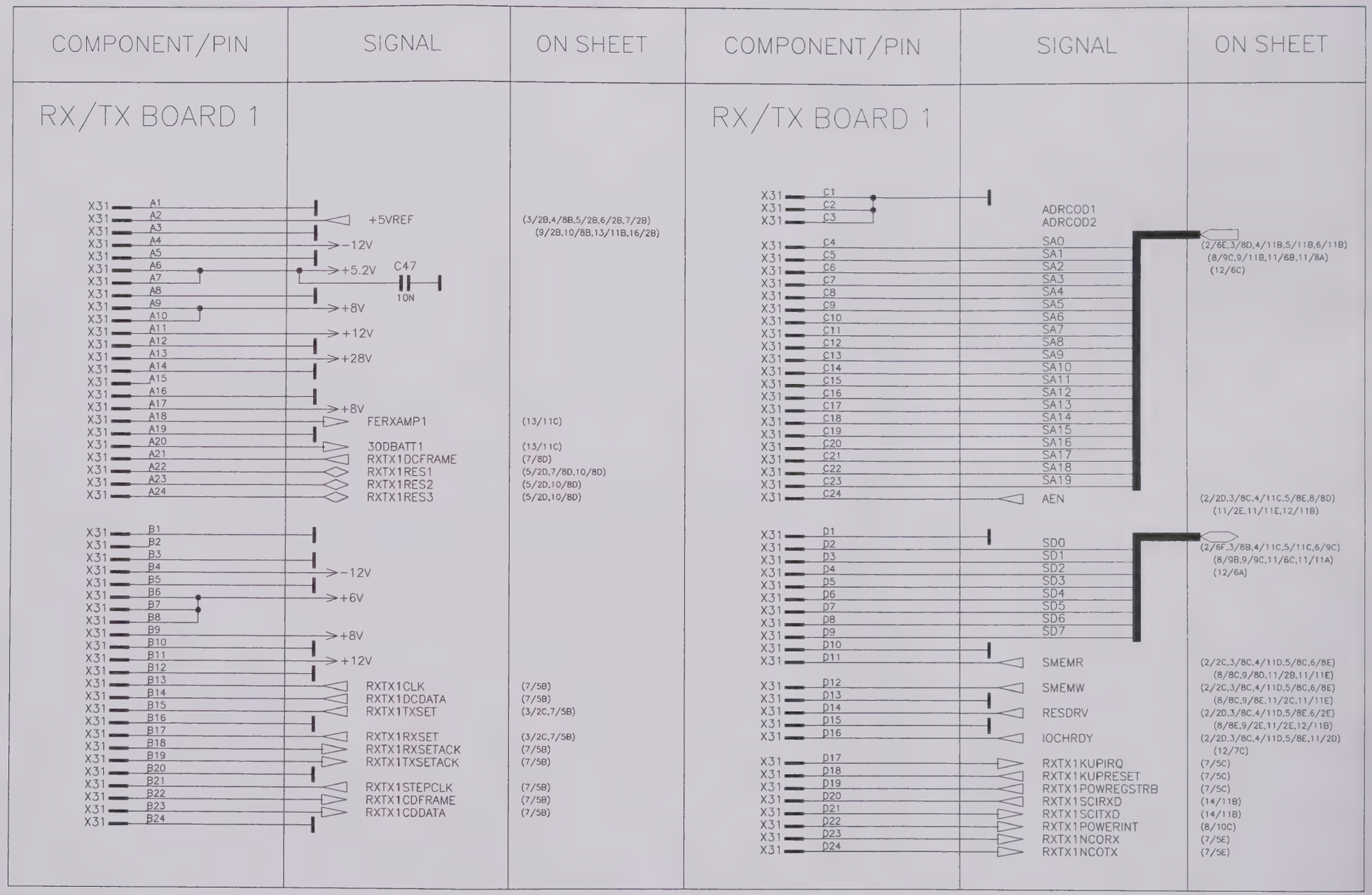

# DEFINITIONS MB1

| COMPONENT/PIN | SIGNAL | ON SHEET |
|---|---|---|
| **RX/TX BOARD 2** | | |
| X41 A1 | +5VREF | (3/2B,4/2B,5/2B,6/2B,7/2B) (9/2B,10/8B,13/11B,16/2B) |
| X41 A2 | | |
| X41 A3 | | |
| X41 A4 | -12V | |
| X41 A5 | | |
| X41 A6 | +5.2V C199 10N | |
| X41 A7 | | |
| X41 A8 | | |
| X41 A9 | +8V | |
| X41 A10 | | |
| X41 A11 | +12V | |
| X41 A12 | | |
| X41 A13 | +28V | |
| X41 A14 | | |
| X41 A15 | | |
| X41 A16 | | |
| X41 A17 | +8V | |
| X41 A18 | FERXAMP2 | (13/11C) |
| X41 A19 | | |
| X41 A20 | 30DBATT2 | (13/11C) |
| X41 A21 | RXTX2DCFRAME | (7/10D) |
| X41 A22 | RXTX2RES1 | (5/2D,7/10D,10/8D) |
| X41 A23 | RXTX2RES2 | (5/2D,10/8D) |
| X41 A24 | RXTX2RES3 | (5/2D,10/8D) |
| X41 B1 | | |
| X41 B2 | | |
| X41 B3 | | |
| X41 B4 | -12V | |
| X41 B5 | | |
| X41 B6 | +6V | |
| X41 B7 | | |
| X41 B8 | | |
| X41 B9 | +8V | |
| X41 B10 | | |
| X41 B11 | +12V | |
| X41 B12 | | |
| X41 B13 | RXTX2CLK | (7/5C) |
| X41 B14 | RXTX2DCDATA | (7/5C) |
| X41 B15 | RXTX2TXSET | (3/2C,7/5C) |
| X41 B16 | | |
| X41 B17 | RXTX2RXSET | (3/2C,7/5C) |
| X41 B18 | RXTX2RXSETACK | (7/5C) |
| X41 B19 | RXTX2TXSETACK | (7/5C) |
| X41 B20 | | |
| X41 B21 | RXTX2STEPCLK | (7/5C) |
| X41 B22 | RXTX2CDFRAME | (7/5C) |
| X41 B23 | RXTX2CDDATA | (7/5C) |
| X41 B24 | | |

| COMPONENT/PIN | SIGNAL | ON SHEET |
|---|---|---|
| **RX/TX BOARD 2** | | |
| X41 C1 | | |
| X41 C2 | +5.2V ADRCOD1 | |
| X41 C3 | ADRCOD2 | |
| X41 C4 | SA0 | (2/6E,3/8D,4/6B,5/11B,6/11B) (8/9C,9/11B,11/6B,11/8A) (12/6C) |
| X41 C5 | SA1 | |
| X41 C6 | SA2 | |
| X41 C7 | SA3 | |
| X41 C8 | SA4 | |
| X41 C9 | SA5 | |
| X41 C10 | SA6 | |
| X41 C11 | SA7 | |
| X41 C12 | SA8 | |
| X41 C13 | SA9 | |
| X41 C14 | SA10 | |
| X41 C15 | SA11 | |
| X41 C16 | SA12 | |
| X41 C17 | SA13 | |
| X41 C18 | SA14 | |
| X41 C19 | SA15 | |
| X41 C20 | SA16 | |
| X41 C21 | SA17 | |
| X41 C22 | SA18 | |
| X41 C23 | SA19 | |
| X41 C24 | AEN | (2/2D,3/8C,4/5C,5/8E,8/8D) (11/2E,11/11E,12/11B) |
| X41 D1 | | |
| X41 D2 | SD0 | (2/6F,3/8B,4/6C,5/11C,6/9C) (8/9B,9/9C,11/6C,11/11A) (12/6A) |
| X41 D3 | SD1 | |
| X41 D4 | SD2 | |
| X41 D5 | SD3 | |
| X41 D6 | SD4 | |
| X41 D7 | SD5 | |
| X41 D8 | SD6 | |
| X41 D9 | SD7 | |
| X41 D10 | | |
| X41 D11 | SMEMR | (2/2C,3/8C,4/5D,5/8C,6/8E) (8/8C,9/8D,11/2B,11/11E) |
| X41 D12 | SMEMW | (2/2C,3/8C,4/5D,5/8C,6/8E) (8/8C,9/8E,11/2C,11/11E) |
| X41 D13 | | |
| X41 D14 | RESDRV | (2/2D,3/8C,4/5D,5/8E,6/2E) (8/8E,9/2E,11/2E,12/11B) |
| X41 D15 | | |
| X41 D16 | IOCHRDY | (2/2D,3/8C,4/5D,5/8E,11/2D) (12/7C) |
| X41 D17 | RXTX2KUPIRQ | (7/5D) |
| X41 D18 | RXTX2KUPRESET | (7/5D) |
| X41 D19 | RXTX2POWREGSTRB | (7/5C) |
| X41 D20 | RXTX2SCIRXD | (14/11B) |
| X41 D21 | RXTX2SCITXD | (14/11B) |
| X41 D22 | RXTX2POWERINT | (8/10C) |
| X41 D23 | RXTX2NCORX | (7/5E) |
| X41 D24 | RXTX2NCOTX | (7/5E) |

| | | | | | | | |
|---|---|---|---|---|---|---|---|
| ROHDE&SCHWARZ | Benennung: MOTHERBOARD-SET | | | | Sprache: / Lang. DE | Aei / C I 02.02 | Blatt: / Sh.: 4+ |
| Typ Type: | Datum: Date: 02-01-25 | Abteilung: Dpt: 1CMK | Name: Name: BERNDT | | Zeichn. Nr.: / Drawing No.: 1100.0908.01 S | | |
| 1. Z.: used in: 1100.0008.01 | | | | TOP/TOP.4 | | | |

| COMPONENT/PIN | SIGNAL | ON SHEET | COMPONENT/PIN | SIGNAL | ON SHEET |
|---|---|---|---|---|---|

## A/B TEST / IQ–MODDEMOD / LOW FREQ BOARD

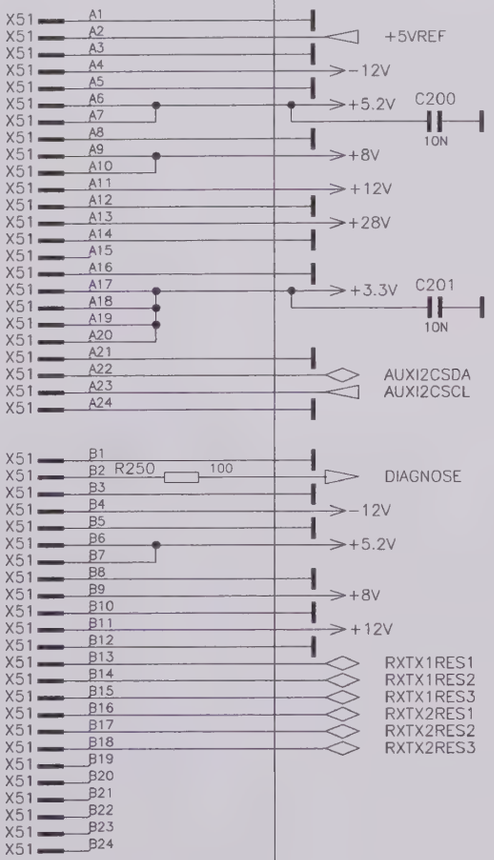


| ON SHEET |
|---|
| (3/2B,4/2B,4/8B,6/2B,7/2B) (9/2B,10/8B,13/11B,16/2B) |
| (3/2C,7/2D,10/8C,14/11C) |
| (3/2C,7/2D,10/8C,14/11C) |
| (3/2D,6/10C,7/2C,9/10C,10/8C) (13/11C,16/2C) |
| (4/2C,7/8D,10/8D) |
| (4/2C,10/8D) |
| (4/2C,10/8D) |
| (4/8C,7/10D,10/8D) |
| (4/8C,10/8D) |
| (4/8C,10/8D) |

## A/B TEST / IQ–MODDEMOD / LOW FREQ BOARD

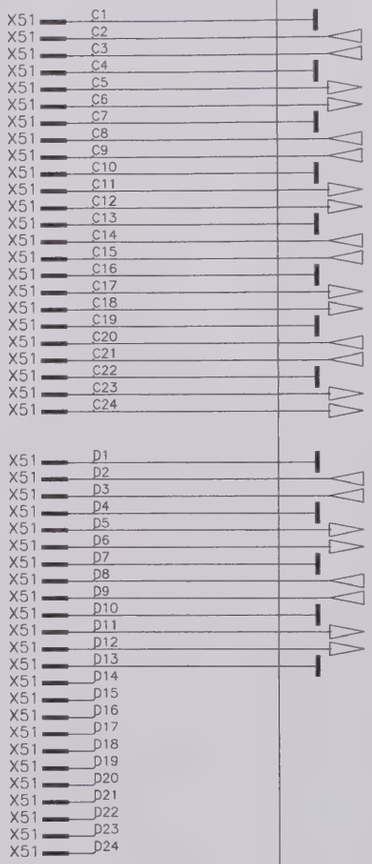


| ON SHEET |
|---|
| (14/8B) |
| (14/8B) |
| (14/8B) |
| (14/8B) |
| (14/8B) |
| (14/8B) |
| (14/8B) |
| (14/8B) |
| (14/8C) |
| (14/8C) |
| (14/8C) |
| (14/8C) |
| (14/8C) |
| (14/8C) |
| (14/8C) |
| (14/8C) |
| (8/10C) |
| (8/10C) |
| (8/10C) |
| (8/10D) |
| (8/10D) |
| (8/10D) |
| (8/10D) |
| (8/10D) |

For this document all rights are reserved

# DEFINITIONS MB1

| COMPONENT/PIN | SIGNAL | ON SHEET | COMPONENT/PIN | SIGNAL | ON SHEET |
|---|---|---|---|---|---|
| A/B TEST / IQ-MODDEMOD / LOW FREQ BOARD | | | A/B TEST / IQ-MODDEMOD / LOW FREQ BOARD | | |
| X52 A1 | +12V | | X52 C1 | MEMW | (2/5C,11/11D,12/11C) |
| X52 A2 | -12V | | X52 C2 | SA0 | (2/6E,3/8D,4/6B,4/11B,6/11B) (8/9C,9/11B,11/6B,11/8A) (12/6C) |
| X52 A3 | | | X52 C3 | SA2 | |
| X52 A4 | +5.2V C202 10N | | X52 C4 | SA4 | |
| X52 A5 | | | X52 C5 | SA6 | |
| X52 A6 | | | X52 C6 | SA8 | |
| X52 A7 | | | X52 C7 | SA10 | |
| X52 A8 | | | X52 C8 | SA12 | |
| X52 A9 | SMEMR | (2/2C,3/8C,4/5D,4/11D,6/8E) (8/8C,9/8D,11/2B,11/11E) | X52 C9 | SA14 | |
| X52 A10 | SMEMW | (2/2C,3/8C,4/5D,4/11D,6/8E) (8/8C,9/8E,11/2C,11/11E) | X52 C10 | SA16 | |
| X52 A11 | IRQ10 | (2/2C,3/8E,8/10B,12/7B) | X52 C11 | SA18 | |
| X52 A12 | IRQ11 | (2/2C,3/8E,8/10B,12/7B) | X52 C12 | LA17 | (2/5C,12/11E) |
| X52 A13 | IRQ12 | (2/2B,3/8E,8/10B,12/7B) | X52 C13 | LA19 | (2/5C,12/11E) |
| X52 A14 | IRQ14 | (2/2B,3/8E,8/10B,12/7B) | X52 C14 | LA21 | (2/5B,12/11E) |
| X52 A15 | IRQ15 | (2/2B,3/8E,8/10B,12/7B) | X52 C15 | LA23 | (2/5B,12/11E) |
| X52 A16 | DRQ0 | (2/2B) | X52 C16 | IRQ4 | (2/5B,3/8E,8/10B,12/7B) |
| X52 A17 | DRQ5 | (2/2B) | X52 C17 | IRQ6 | (2/5B,3/8E,8/10B) |
| X52 A18 | DRQ6 | (2/2B) | X52 C18 | DACK2 | (2/5B) |
| X52 A19 | DRQ7 | (2/2B) | | | |
| X52 A20 | DACK0 | (2/2B) | X52 C19 | SD8 | (2/6F,3/8B,4/6C,4/11C,6/9C) (8/9B,9/9C,11/6C,11/11A) (12/6A) |
| X52 A21 | DACK5 | (2/2B) | X52 C20 | SD10 | |
| X52 A22 | DACK6 | (2/2B) | X52 C21 | SD12 | |
| X52 A23 | DACK7 | (2/2B) | X52 C22 | SD14 | |
| X52 A24 | OSC | (2/2B,3/8B) | X52 C23 | MEMCS16 | (2/5B,11/5C,12/7C) |
| X52 B1 | IOR | (2/2E,3/8C,6/8D,8/8C,9/8D) (11/2C,11/11D,12/11C) | X52 C24 | MASTER | (2/5B,3/8C) |
| X52 B2 | IOW | (2/2E,3/8C,6/8D,8/8C,9/8D) (11/2C,11/11D,12/11B) | X52 D1 | MEMR | (2/5E,11/11D,12/11C) |
| X52 B3 | BALE | (2/2E,3/8C,11/2D,11/11D)(12/11B) | X52 D2 | SBHE | (2/5E,3/8C,11/5C,11/11E)(12/11B) |
| X52 B4 | IRQ9 | (2/2E,3/8E,8/10B,12/7B) | X52 D3 | SA1 | |
| X52 B5 | IOCHCHK | (2/2E) | X52 D4 | SA3 | |
| X52 B6 | DRQ2 | (2/2E) | X52 D5 | SA5 | |
| X52 B7 | DRQ1 | (2/2E) | X52 D6 | SA7 | |
| X52 B8 | DACK1 | (2/2E) | X52 D7 | SA9 | |
| X52 B9 | DACK3 | (2/2E) | X52 D8 | SA11 | |
| X52 B10 | SD0 | | X52 D9 | SA13 | |
| X52 B11 | SD1 | | X52 D10 | SA15 | |
| X52 B12 | SD2 | | X52 D11 | SA17 | |
| X52 B13 | SD3 | | X52 D12 | SA19 | |
| X52 B14 | SD4 | | X52 D13 | LA18 | (2/5E,12/11E) |
| X52 B15 | SD5 | | X52 D14 | LA20 | (2/5E,12/11E) |
| X52 B16 | SD6 | | X52 D15 | LA22 | (2/5D,12/11E) |
| X52 B17 | SD7 | | X52 D16 | IRQ3 | (2/5D,3/8E,8/10B,12/7B) |
| X52 B18 | DRQ3 | (2/2D) | X52 D17 | IRQ5 | (2/5D,3/8E,8/10B,12/7B) |
| X52 B19 | IOCHRDY | (2/2D,3/8C,4/5D,4/11D,11/2D) (12/7C) | X52 D18 | IRQ7 | (2/5D,3/8E,8/10B,12/7B) |
| X52 B20 | AEN | (2/2D,3/8C,4/5C,4/11C,8/8D) (11/2E,11/11E,12/11B) | X52 D19 | TC | (2/5D,3/8C) |
| X52 B21 | RESDRV | (2/2D,3/8C,4/5D,4/11D,6/2E) (8/8E,9/2E,11/2E,12/11B) | X52 D20 | SD9 | |
| X52 B22 | OWS | (2/2D,11/2E,12/7C) | X52 D21 | SD11 | |
| X52 B23 | REFRESH | (2/2D,3/8C) | X52 D22 | SD13 | |
| X52 B24 | SYSCLK | (2/2D,3/8B,11/2E,11/11E) (12/11A) | X52 D23 | SD15 | |
| | | | X52 D24 | IOCS16 | (2/5D,3/8C,8/8C,11/5E,12/7C) |

| | | | | | | |
|---|---|---|---|---|---|---|
| ROHDE&SCHWARZ | Benennung: / Designation: MOTHERBOARD-SET | | | Sprache: / Lang.: DE | Aei: / C I 02.02 | Blatt: / Sh.: 5+ |
| Typ: / Type | Datum / Date 02-01-25 | Abteilung: / Dpt: 1CMK | Name: / Name: BERNDT | Zeichn. Nr.: / Drawing No.: 1100.0908.01 S | | |
| 1. Z.: / used in: 1100.0008.01 | TOP/TOP.5 | | | | | |

Fuer diese Unterlage behalten wir uns alle Rechte vor
For this document all rights are reserved

| COMPONENT/PIN | SIGNAL | ON SHEET |
|---|---|---|
| **UNIVERSAL SIGN. UNIT 2** | | |
| X61 A1 | | |
| X61 A2 | +5VREF | (3/2B,4/2B,4/8B,5/2B,7/2B) (9/2B,10/8B,13/11B,16/2B) |
| X61 A3 | | |
| X61 A4 | −12V | |
| X61 A5 | | |
| X61 A6 | +5.2V C214 10N | |
| X61 A7 | | |
| X61 A8 | | |
| X61 A9 | +8V | |
| X61 A10 | | |
| X61 A11 | +12V | |
| X61 A12 | LH2MID0 | (8/5B) |
| X61 A13 | LH2MQD0 | (8/5C) |
| X61 A14 | | |
| X61 A15 | LH2SERCLK | (7/10C) |
| X61 A16 | LH2SERLDDATA | (7/10C) |
| X61 A17 | LH2SERLDFRAME | (7/10C) |
| X61 A18 | LH2SERDLDATA | (7/10C) |
| X61 A19 | LH2PRISYNTHENRES (n.c.) | |
| X61 A20 | LH2SERDLFRAME | (7/10D) |
| X61 A21 | LH2PRITXI | (7/10D) |
| X61 A22 | LH2PRITXQ | (7/10D) |
| X61 A23 | LH2PRITXIQGND | (7/10D) |
| X61 A24 | LH2TXSET | (7/10D) |
| X61 A25 | LH2RXSET | (7/10D) |
| X61 A26 R258 220 | LH2POWREGSTRB | (7/10D,10/10D) |
| X61 A27 | LH2RSVD1 | (7/10D) |
| X61 A28 | LH2SECSYNTHENRES (n.c.) | |
| X61 A29 | LH2RSVD2 | (7/10D) |
| X61 A30 | LH2SECTXI | (7/10D) |
| X61 A31 | LH2SECTXQ | (7/10D) |
| X61 A32 | LH2SECTXIQGND | (7/10D) |
| X61 B1 | LH2LEVCLK (n.c.) | |
| X61 B2 | LH2LEVDATA (n.c.) | |
| X61 B3 | +3.3V C215 10N | |
| X61 B4 | | |
| X61 B5 | | |
| X61 B6 | +5.2V | |
| X61 B7 | | |
| X61 B8 | | |
| X61 B9 | LH2AFGENMON | (3/2C,16/2C) |
| X61 B10 | LH2HANDSETIN | (13/3E,16/2D) |
| X61 B11 | LH2HANDSETOUT | (13/3E,16/2D) |
| X61 B12 | | |
| X61 B13 | LH2TBUS6 | (8/5D) |
| X61 B14 | LH2TBUS7 | (8/5D) |
| X61 B15 | | |
| X61 B16 | | |
| X61 B17 | | |
| X61 B18 | | |
| X61 B19 | | |
| X61 B20 | | |
| X61 B21 | LH2RES1 | (16/5C) |
| X61 B22 | | |
| X61 B23 | RESDRV | (2/2D,3/8C,4/5D,4/11D,5/8E) (8/8E,9/2E,11/2E,12/11B) |
| X61 B24 | LH2DEMSERDAT1 | (8/5D) |
| X61 B25 | LH2DEMSERDAT2 | (8/5D) |
| X61 B26 | LH2DEMSERCLK | (8/5D) |
| X61 B27 | LH2DEMSERSTRB | (8/5D) |
| X61 B28 | LH2XSPTXRDY | (16/5C) |
| X61 B29 | LH2BSPBFI | (16/5C) |
| X61 B30 | LH2XSPSP | (16/5C) |
| X61 B31 | LH2BSPTXSFM | (16/5C) |
| X61 B32 | LH2PRISPTAF | (16/5C) |

| COMPONENT/PIN | SIGNAL | ON SHEET |
|---|---|---|
| **UNIVERSAL SIGN. UNIT 2** | | |
| | C223 * 100N | |
| X61 C1 | LH2GND | (13/3F) |
| X61 C2 | LH2RIA | (13/3F) |
| X61 C3 | LH2DTRA | (13/3F) |
| X61 C4 | LH2CTSA | (13/3F) |
| X61 C5 | LH2TXDA | (13/3F) |
| X61 C6 | LH2RTSA | (13/3F) |
| X61 C7 | LH2RXDA | (13/3F) |
| X61 C8 | LH2DSRA | (13/3F) |
| X61 C9 | LH2DCDA | (13/3E) |
| X61 C10 | LH2SERVGND | (13/3F) |
| X61 C11 | LH2TBUS8 | (8/5D) |
| X61 C12 | | |
| X61 C13 | LH2DID4 | (7/10B) |
| X61 C14 | LH2DID5 | (7/10B) |
| X61 C15 | LH2DID6 | (7/10B) |
| X61 C16 | LH2DID7 | (7/10B) |
| X61 C17 | LH2DID8 | (7/10B) |
| X61 C18 | LH2DID9 | (7/10B) |
| X61 C19 | LH2DID10 | (7/10B) |
| X61 C20 | LH2DID11 | (7/10B) |
| X61 C21 | | |
| X61 C22 | LH2DQD4 | (7/10C) |
| X61 C23 | LH2DQD5 | (7/10C) |
| X61 C24 | LH2DQD6 | (7/10C) |
| X61 C25 | LH2DQD7 | (7/10C) |
| X61 C26 | LH2DQD8 | (7/10C) |
| X61 C27 | LH2DQD9 | (7/10C) |
| X61 C28 | LH2DQD10 | (7/10C) |
| X61 C29 | LH2DQD11 | (7/10C) |
| X61 C30 | LH2DIQCLK | (7/2C) |
| X61 C31 | | |
| X61 C32 | LH2NETCLK | (7/2C) |
| X62 A1 | | |
| X62 A2 | +3.3V | |
| X62 A3 | | |
| X62 A4 | | |
| X62 A5 | | |
| X62 A6 R233 0 * | (LH2ID0) | |
| X62 A7 R234 0 | (LH2ID1) | |
| X62 A8 | | |
| X62 A9 | | |
| X62 A10 | | |
| X62 A11 | | |
| X62 A12 | | |
| X62 B1 | | |
| X62 B2 | | |
| X62 B3 | | |
| X62 B4 | | |
| X62 B5 | | |
| X62 B6 | | |
| X62 B7 | | |
| X62 B8 | | |
| X62 B9 | | |
| X62 B10 | | |
| X62 B11 | | |
| X62 B12 | | |

# DEFINITIONS MB1

| COMPONENT/PIN | SIGNAL | ON SHEET | COMPONENT/PIN | SIGNAL | ON SHEET |
|---|---|---|---|---|---|

## UNIVERSAL SIGN. UNIT 2

C212 10N: +3.3V

| | | |
|---|---|---|
| X62 C1 | LH1LH2CON1 | (9/8B) |
| X62 C2 | LH1LH2CON2 | (9/8B) |
| X62 C3 | LH1LH2CON3 | (9/8B) |
| X62 C4 | LH1LH2CON4 | (9/8B) |
| X62 C5 | LH1LH2CON5 | (9/8B) |
| X62 C6 | LH1LH2CON6 | (9/8B) |
| X62 C7 | LH1LH2CON7 | (9/8B) |
| X62 C8 | LH1LH2CON8 | (9/8B) |
| X62 C9 | LH1LH2CON9 | (9/8B) |
| X62 C10 | LH1LH2CON10 | (9/8B) |
| X62 C11 | LH1LH2CON11 | (9/8B) |
| X62 C12 | LH1LH2CON12 | (9/8B) |
| X62 D1 | LH2LH1CON1 | (9/8B) |
| X62 D2 | LH2LH1CON2 | (9/8C) |
| X62 D3 | LH2LH1CON3 | (9/8C) |
| X62 D4 | LH2LH1CON4 | (9/8C) |
| X62 D5 | LH2LH1CON5 | (9/8C) |
| X62 D6 | LH2LH1CON6 | (9/8C) |
| X62 D7 | LH2LH1CON7 | (9/8C) |
| X62 D8 | LH2LH1CON8 | (9/8C) |
| X62 D9 | LH2LH1CON9 | (9/8C) |
| X62 D10 | LH2LH1CON10 | (9/8C) |
| X62 D11 | LH2LH1CON11 | (9/8C) |
| X62 D12 | LH2LH1CON12 | (9/8C) |
| X63 A1, A2, A3 | | |
| X63 A4 | SD0 | (2/6F,3/8B,4/6C,4/11C,5/11C) (8/9B,9/9C,11/6C,11/11A) (12/6A) |
| X63 A5 | SD1 | |
| X63 A6 | SD2 | |
| X63 A7 | SD3 | |
| X63 A8 | SD4 | |
| X63 A9 | SD5 | |
| X63 A10 | SD6 | |
| X63 A11 | SD7 | |
| X63 A12 | LH2DID3 | (7/10B) |
| X63 A13 | LH2DID2 | (7/10B) |
| X63 A14 | LH2DID1 | (7/10B) |
| X63 A15 | LH2DID0 | (7/10B) |
| X63 A16 | LH2DQD3 | (7/10C) |
| X63 A17 | LH2DQD2 | (7/10C) |
| X63 A18 | LH2DQD1 | (7/10C) |
| X63 A19 | LH2DQD0 | (7/10C) |
| X63 A20 | | |
| X63 A21 | LH2MQD9 | (8/5C) |
| X63 A22 | LH2MQD8 | (8/5C) |
| X63 A23 | IOW | (2/2E,3/8C,5/8D,8/8C,9/8D) (11/2C,11/11D,12/11B) |
| X63 A24 | IOR | (2/2E,3/8C,5/8D,8/8C,9/8D) (11/2C,11/11D,12/11C) |
| X63 A25 | SMEMR | (2/2C,3/8C,4/5D,4/11D,5/8C) (8/8C,9/8D,11/2B,11/11E) |
| X63 A26 | SMEMW | (2/2C,3/8C,4/5D,4/11D,5/8C) (8/8C,9/8E,11/2C,11/11E) |
| X63 A27 | | |
| X63 A28 | LH2SCIEXTRXD | (8/5D) |
| X63 A29 | LH2SCIEXTTXD | (8/5D) |
| X63 A30 | LH2SCIEXTSCLK | (8/5D) |
| X63 A31 | | |
| X63 A32 | LH2NETCLKOUT (n.c.) | |

C213 10N: +5.2V

## UNIVERSAL SIGN. UNIT 2

| | | |
|---|---|---|
| X63 B1 | SA0 | (2/6E,3/8D,4/6B,4/11B,5/11B) (8/9C,9/11B,11/6B,11/8A) (12/6C) |
| X63 B2 | SA1 | |
| X63 B3 | SA2 | |
| X63 B4 | SA3 | |
| X63 B5 | SA4 | |
| X63 B6 | SA5 | |
| X63 B7 | SA6 | |
| X63 B8 | SA7 | |
| X63 B9 | SA8 | |
| X63 B10 | SA9 | |
| X63 B11 | SA10 | |
| X63 B12 | SA11 | |
| X63 B13 | | |
| X63 B14 | LH2MIQCLK | (8/5C) |
| X63 B15 | LH2MID11 | (8/5B) |
| X63 B16 | LH2MID10 | (8/5B) |
| X63 B17 | LH2MID9 | (8/5B) |
| X63 B18 | LH2MID8 | (8/5B) |
| X63 B19 | LH2MQD11 | (8/5C) |
| X63 B20 | LH2MQD10 | (8/5C) |
| X63 B21 R251 100 | DIAGNOSE | (3/2D,5/2D,7/2C,9/10C,10/8C) (13/11C,16/2C) |
| X63 B22 | LH2SECEXTI (n.c.) | |
| X63 B23 | | |
| X63 B24 | LH2SECEXTQ (n.c.) | |
| X63 B25 | | |
| X63 B26 | LH2PRIEXTRAMP (n.c.) | |
| X63 B27 | | |
| X63 B28 | LH2PRIEXTI (n.c.) | |
| X63 B29 | | |
| X63 B30 | LH2PRIEXTQ (n.c.) | |
| X63 B31 | | |
| X63 B32 | | |
| X63 C1 | | |
| X63 C2 | | |
| X63 C3 | LH2MID1 | (8/5B) |
| X63 C4 | LH2MID2 | (8/5B) |
| X63 C5 | LH2MID3 | (8/5B) |
| X63 C6 | LH2MID4 | (8/5B) |
| X63 C7 | LH2MID5 | (8/5B) |
| X63 C8 | LH2MID6 | (8/5B) |
| X63 C9 | LH2MID7 | (8/5B) |
| X63 C10 | | |
| X63 C11 | LH2MQD1 | (8/5C) |
| X63 C12 | LH2MQD2 | (8/5C) |
| X63 C13 | LH2MQD3 | (8/5C) |
| X63 C14 | LH2MQD4 | (8/5C) |
| X63 C15 | LH2MQD5 | (8/5C) |
| X63 C16 | LH2MQD6 | (8/5C) |
| X63 C17 | LH2MQD7 | (8/5C) |
| X63 C18 | | |
| X63 C19 | LH2TBUS1 | (8/5C) |
| X63 C20 | LH2TBUS2 | (8/5C) |
| X63 C21 | LH2TBUS3 | (8/5C) |
| X63 C22 | LH2TBUS4 | (8/5D) |
| X63 C23 | LH2TBUS5 | (8/5D) |
| X63 C24 | LH2SIGINT | (3/2C,7/5D) |
| X63 C25 | POWERINT | (7/5D,9/10E,13/11C) |
| X63 C26 | | |
| X63 C27 | LH2CSDPRAM | (7/5D) |
| X63 C28 | LH2CSLHCONTROL | (7/5D) |
| X63 C29 | LH2DRVENABLE | (7/5D) |
| X63 C30 | LH2DRVDIR | (7/5D) |
| X63 C31 | LH2LHINT | (7/5D) |
| X63 C32 | | |

| | | | | | |
|---|---|---|---|---|---|
| ROHDE&SCHWARZ | Benennung: / Designation: MOTHERBOARD–SET | | | Sprache: / Lang.: DE | Aei / C I 02.02 | Blatt: / Sh.: 6+ |
| Typ / Type | Datum: / Date 02–01–25 | Abteilung: / Dpt: 1CMK | Name: / Name: BERNDT | Zeichn. Nr.: / Drawing No.: 1100.0908.01 S | | |
| 1. Z.: / used in: 1100.0008.01 | TOP/TOP.6 | | | | | |

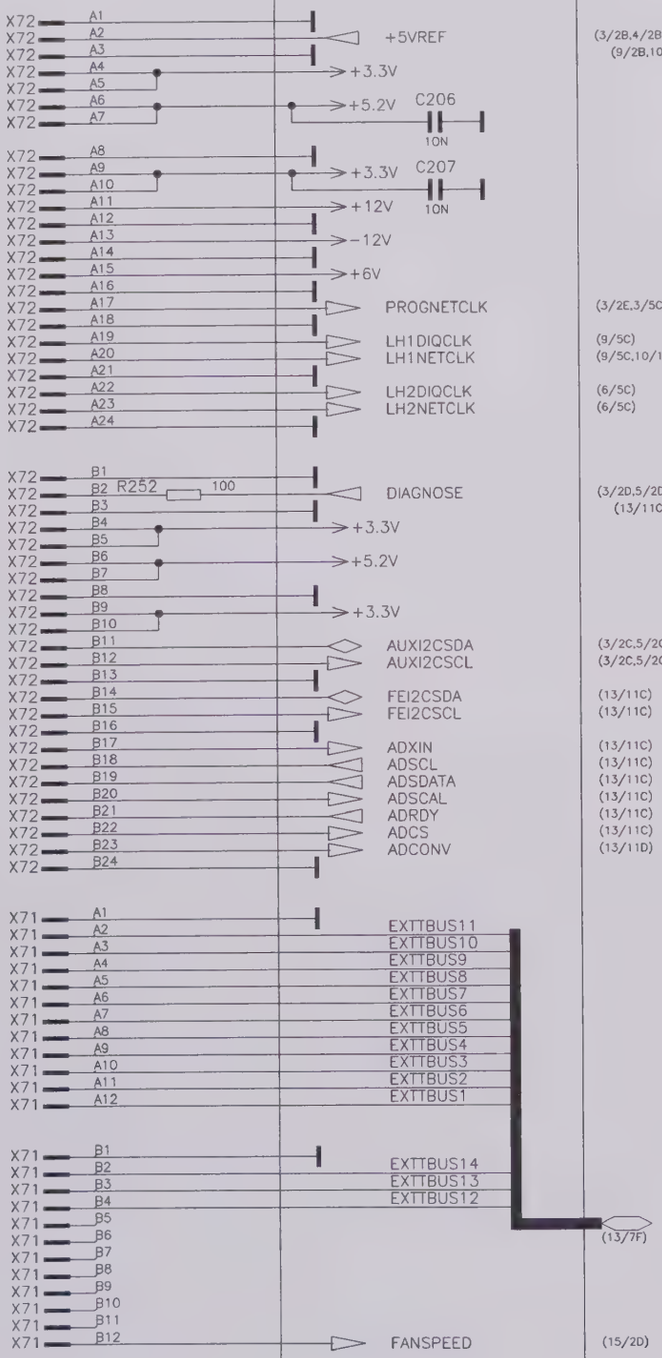


For this document all rights are reserved

# DEFINITIONS MB1

| COMPONENT/PIN | SIGNAL | ON SHEET | COMPONENT/PIN | SIGNAL | ON SHEET |
|---|---|---|---|---|---|
| DIGITAL BOARD | | | DIGITAL BOARD | | |
| X73 A1 | LH1DID0 | (9/8D) | X73 C1 | LH2DID0 | (6/8D) |
| X73 A2 | LH1DID1 | (9/8D) | X73 C2 | LH2DID1 | (6/8D) |
| X73 A3 | LH1DID2 | (9/8D) | X73 C3 | LH2DID2 | (6/8D) |
| X73 A4 | LH1DID3 | (9/8D) | X73 C4 | LH2DID3 | (6/8D) |
| X73 A5 | LH1DID4 | (9/5B) | X73 C5 | LH2DID4 | (6/5B) |
| X73 A6 | LH1DID5 | (9/5B) | X73 C6 | LH2DID5 | (6/5B) |
| X73 A7 | LH1DID6 | (9/5B) | X73 C7 | LH2DID6 | (6/5C) |
| X73 A8 | LH1DID7 | (9/5C) | X73 C8 | LH2DID7 | (6/5C) |
| X73 A9 | LH1DID8 | (9/5C) | X73 C9 | LH2DID8 | (6/5C) |
| X73 A10 | LH1DID9 | (9/5C) | X73 C10 | LH2DID9 | (6/5C) |
| X73 A11 | LH1DID10 | (9/5C) | X73 C11 | LH2DID10 | (6/5C) |
| X73 A12 | LH1DID11 | (9/5C) | X73 C12 | LH2DID11 | (6/5C) |
| X73 A13 | LH1DQD0 | (9/8D) | X73 C13 | LH2DQD0 | (6/8D) |
| X73 A14 | LH1DQD1 | (9/8D) | X73 C14 | LH2DQD1 | (6/8D) |
| X73 A15 | LH1DQD2 | (9/8D) | X73 C15 | LH2DQD2 | (6/8D) |
| X73 A16 | LH1DQD3 | (9/8D) | X73 C16 | LH2DQD3 | (6/8D) |
| X73 A17 | LH1DQD4 | (9/5C) | X73 C17 | LH2DQD4 | (6/5C) |
| X73 A18 | LH1DQD5 | (9/5C) | X73 C18 | LH2DQD5 | (6/5C) |
| X73 A19 | LH1DQD6 | (9/5C) | X73 C19 | LH2DQD6 | (6/5C) |
| X73 A20 | LH1DQD7 | (9/5C) | X73 C20 | LH2DQD7 | (6/5C) |
| X73 A21 | LH1DQD8 | (9/5C) | X73 C21 | LH2DQD8 | (6/5C) |
| X73 A22 | LH1DQD9 | (9/5C) | X73 C22 | LH2DQD9 | (6/5C) |
| X73 A23 | LH1DQD10 | (9/5C) | X73 C23 | LH2DQD10 | (6/5C) |
| X73 A24 | LH1DQD11 | (9/5C) | X73 C24 | LH2DQD11 | (6/5C) |
| X73 B1 | | | X73 D1 | | |
| X73 B2 | LH1SERCLK | (9/2B) | X73 D2 | LH2SERCLK | (6/2C) |
| X73 B3 | LH1SERLDDATA | (9/2C) | X73 D3 | LH2SERLDDATA | (6/2C) |
| X73 B4 | LH1SERLDFRAME | (9/2C) | X73 D4 | LH2SERLDFRAME | (6/2C) |
| X73 B5 | LH1SERDLDATA | (9/2C) | X73 D5 | LH2SERDLDATA | (6/2C) |
| X73 B6 | | | X73 D6 | | |
| X73 B7 | LH1TXSET | (9/2C) | X73 D7 | LH2TXSET | (6/2C) |
| X73 B8 | LH1RXSET | (9/2C) | X73 D8 | LH2RXSET | (6/2C) |
| X73 B9 | LH1POWREGSTRB | (9/2C,10/10D) | X73 D9 | LH2POWREGSTRB | (6/2C,10/10D) |
| X73 B10 | LH1RSVD1 | (9/2C) | X73 D10 | LH2RSVD1 | (6/2C) |
| X73 B11 | | | X73 D11 | | |
| X73 B12 | RXTX1DCFRAME | (4/2C) | X73 D12 | RXTX2DCFRAME | (4/8C) |
| X73 B13 | RXTX1RES1 | (4/2C,5/2D,10/8D) | X73 D13 | RXTX2RES1 | (4/8C,5/2D,10/8D) |
| X73 B14 | LH1SERDLFRAME | (9/2C) | X73 D14 | LH2SERDLFRAME | (6/2C) |
| X73 B15 | LH1RSVD2 | (9/2C) | X73 D15 | LH2RSVD2 | (6/2C) |
| X73 B16 | | | X73 D16 | | |
| X73 B17 | LH1PRITXI | (9/2C) | X73 D17 | LH2PRITXI | (6/2C) |
| X73 B18 | LH1PRITXQ | (9/2C) | X73 D18 | LH2PRITXQ | (6/2C) |
| X73 B19 | LH1PRITXIQGND | (9/2C) | X73 D19 | LH2PRITXIQGND | (6/2C) |
| X73 B20 | | | X73 D20 | | |
| X73 B21 | LH1SECTXI | (9/2C) | X73 D21 | LH2SECTXI | (6/2C) |
| X73 B22 | LH1SECTXQ | (9/2C) | X73 D22 | LH2SECTXQ | (6/2C) |
| X73 B23 | LH1SECTXIQGND | (9/2C) | X73 D23 | LH2SECTXIQGND | (6/2C) |
| X73 B24 | | | X73 D24 | | |

| | | | | | |
|---|---|---|---|---|---|
| ROHDE&SCHWARZ | Benennung: / Designation: MOTHERBOARD-SET | | | Sprache: / Lang.: DE | Aei / CI 02.02 | Blatt: / Sh.: 7+ |
| Typ / Type | Datum / Date: 02-01-25 | Abteilung: / Dpt: 1CMK | Name: / Name: BERNDT | Zeichn. Nr.: / Drawing No.: 1100.0908.01 S | | |
| 1. Z., used in 1100.0008.01 | | | TOP/TOP.7 | | | |

# EFINITIONS MB1

| COMPONENT/PIN | SIGNAL | ON SHEET | COMPONENT/PIN | SIGNAL | ON SHEET |
|---|---|---|---|---|---|
| DIGITAL BOARD | | | DIGITAL BOARD | | |
| X75 A1 | | | X75 C1 | IRQ3 | (2/5D,3/8E,5/10D,12/7B) |
| X75 A2 | SD0 | (2/6F,3/8B,4/6C,4/11C,5/11C) | X75 C2 | IRQ4 | (2/5B,3/8E,5/10C,12/7B) |
| X75 A3 | SD1 | (6/9C,9/9C,11/6C,11/11A) | X75 C3 | IRQ5 | (2/5D,3/8E,5/10E,12/7B) |
| X75 A4 | SD2 | (12/6A) | X75 C4 | IRQ6 | (2/5B,3/8E,5/10C) |
| X75 A5 | SD3 | | X75 C5 | IRQ7 | (2/5D,3/8E,5/10E,12/7B) |
| X75 A6 | SD4 | | X75 C6 | IRQ9 | (2/2E,3/8E,5/8D,12/7B) |
| X75 A7 | SD5 | | X75 C7 | IRQ10 | (2/2C,3/8E,5/8C,12/7B) |
| X75 A8 | SD6 | | X75 C8 | IRQ11 | (2/2C,3/8E,5/8C,12/7B) |
| X75 A9 | SD7 | | X75 C9 | IRQ12 | (2/2B,3/8E,5/8C,12/7B) |
| X75 A10 | SD8 | | X75 C10 | IRQ14 | (2/2B,3/8E,5/8C,12/7B) |
| X75 A11 | SD9 | | X75 C11 | IRQ15 | (2/2B,3/8E,5/8C,12/7B) |
| X75 A12 | SD10 | | X75 C12 | IRQ16 | (2/8C) |
| X75 A13 | SD11 | | X75 C13 | IRQ17 | (2/8C) |
| X75 A14 | SD12 | | X75 C14 | IRQ18 | (2/8C) |
| X75 A15 | SD13 | | X75 C15 | IRQ19 | (2/8C) |
| X75 A16 | SD14 | | X75 C16 | AUDIOIRQ | (16/5D) |
| X75 A17 | SD15 | | X75 C17 | AUDIOAEN | (16/5C) |
| X75 A18 | | | X75 C18 | REFAEN | (16/5C) |
| X75 A19 | IOW | (2/2E,3/8C,5/8D,6/8D,9/8D) (11/2C,11/11D,12/11B) | X75 C19 | BSA0 | (16/5D) |
| X75 A20 | IOR | (2/2E,3/8C,5/8D,6/8D,9/8D) (11/2C,11/11D,12/11C) | X75 C20 | BSA1 | (16/5D) |
| X75 A21 | SMEMR | (2/2C,3/8C,4/5D,4/11D,5/8C) (6/8E,9/8D,11/2B,11/11E) | X75 C21 | BSA2 | (16/5D) |
| X75 A22 | SMEMW | (2/2C,3/8C,4/5D,4/11D,5/8C) (6/8E,9/8E,11/2C,11/11E) | X75 C22 | BSA3 | (16/5D) |
| X75 A23 | IOCS16 | (2/5D,3/8C,5/10E,11/5E,12/7C) | X75 C23 | BIOR | (16/5D) |
| X75 A24 | | | X75 C24 | BIOW | (16/5D) |
| X75 B1 | SA0 | (2/6E,3/8D,4/6B,4/11B,5/11B) (6/11B,9/11B,11/6B,11/8A) (12/6C) | X75 D1 | PFCINT | (16/5D) |
| X75 B2 | SA1 | | X75 D2 | RXTX1POWERINT | (4/5D) |
| X75 B3 | SA2 | | X75 D3 | RXTX2POWERINT | (4/11D) |
| X75 B4 | SA3 | | X75 D4 | IMODFILAUC1 | (5/5D) |
| X75 B5 | SA4 | | X75 D5 | QMODFILAUC1 | (5/5D) |
| X75 B6 | SA5 | | X75 D6 | IMODTOAUC1 | (5/5D) |
| X75 B7 | SA6 | | X75 D7 | QMODTOAUC1 | (5/5D) |
| X75 B8 | SA7 | | X75 D8 | IMODFILAUC2 | (5/5D) |
| X75 B9 | SA8 | | X75 D9 | QMODFILAUC2 | (5/5D) |
| X75 B10 | SA9 | | X75 D10 | IMODTOAUC2 | (5/5D) |
| X75 B11 | SA10 | | X75 D11 | QMODTOAUC2 | (5/5D) |
| X75 B12 | SA11 | | X75 D12 | | |
| X75 B13 | SA12 | | X75 D13 | | |
| X75 B14 | SA13 | | X75 D14 | BRESET | (16/5D) |
| X75 B15 | SA14 | | X75 D15 | | |
| X75 B16 | SA15 | | X75 D16 | BSD0 | (16/5D) |
| X75 B17 | SA16 | | X75 D17 | BSD1 | (16/5D) |
| X75 B18 | SA17 | | X75 D18 | BSD2 | (16/5D) |
| X75 B19 | SA18 | | X75 D19 | BSD3 | (16/5D) |
| X75 B20 | SA19 | | X75 D20 | BSD4 | (16/5D) |
| X75 B21 | AEN | (2/2D,3/8C,4/5C,4/11C,5/8E) (11/2E,11/11E,12/11B) | X75 D21 | BSD5 | (16/5D) |
| X75 B22 | | | X75 D22 | BSD6 | (16/5D) |
| X75 B23 | RESDRV | (2/2D,3/8C,4/5D,4/11D,5/8E) (6/2E,9/2E,11/2E,12/11B) | X75 D23 | BSD7 | (16/5D) |
| X75 B24 | | | X75 D24 | | |

| | | | | | |
|---|---|---|---|---|---|
| ROHDE&SCHWARZ | Benennung: MOTHERBOARD-SET | | | Sprache: / Lang.: DE | Ae. / C.I. 02.02 | Blatt: / Sh. 8+ |
| Typ: Type. | Datum: 02-01-25 | Abteilung: Dpt: 1CMK | Name: BERNDT | Zeichn. Nr.: / Drawing No.: 1100.0908.01 S | | |
| 1. Z.. used in 1100.0008.01 | TOP/TOP.8 | | | | | |

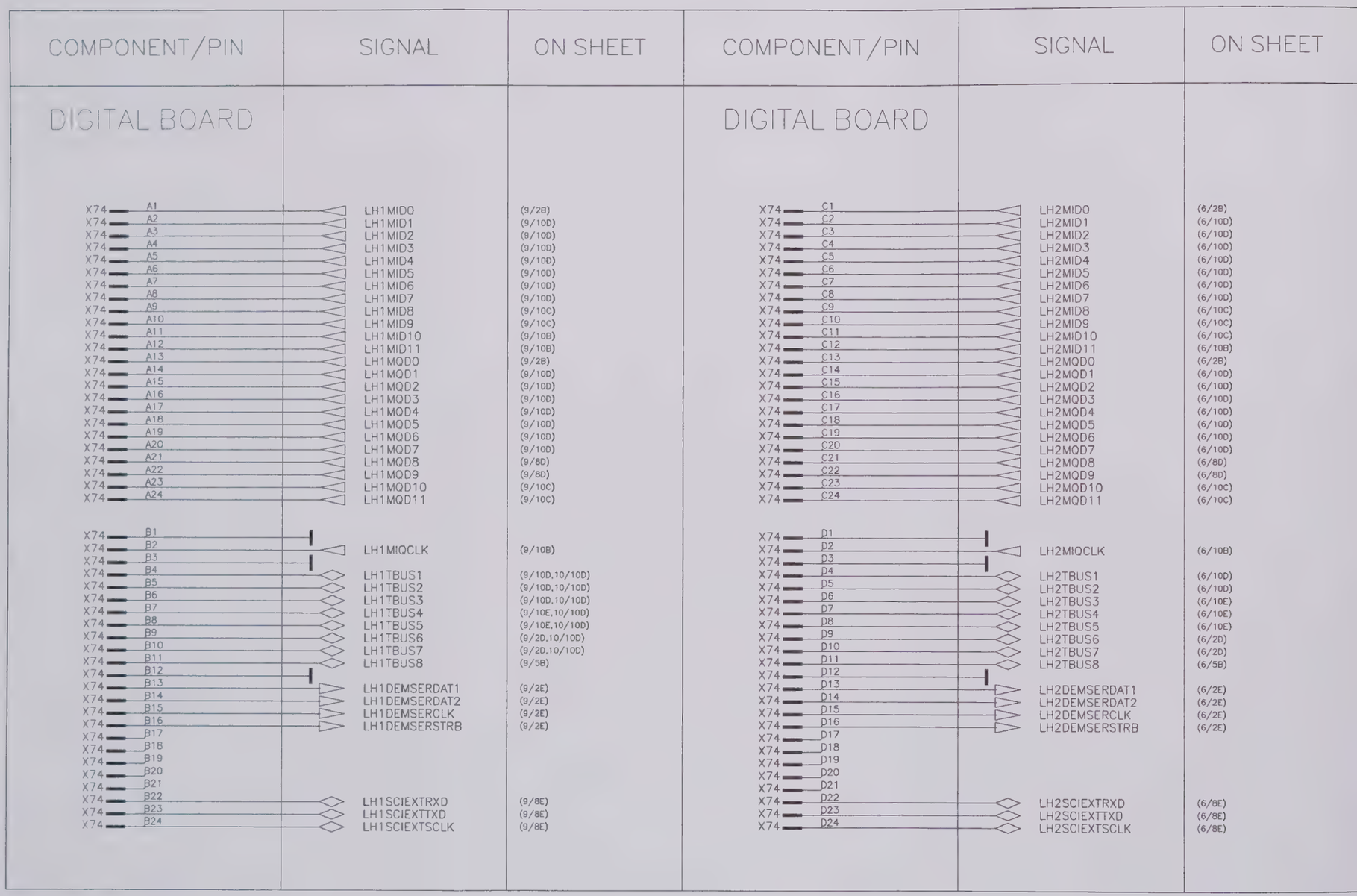


For this document all rights are reserved

# DEFINITIONS MB1

| COMPONENT/PIN | SIGNAL | ON SHEET |
|---|---|---|
| **UNIVERSAL SIGN. UNIT 1** | | |
| X82 C1 | LH1LH2CON1 | (6/8B) |
| X82 C2 | LH1LH2CON2 | (6/8B) |
| X82 C3 | LH1LH2CON3 | (6/8B) |
| X82 C4 | LH1LH2CON4 | (6/8B) |
| X82 C5 | LH1LH2CON5 | (6/8B) |
| X82 C6 | LH1LH2CON6 | (6/8B) |
| X82 C7 | LH1LH2CON7 | (6/8B) |
| X82 C8 | LH1LH2CON8 | (6/8B) |
| X82 C9 | LH1LH2CON9 | (6/8B) |
| X82 C10 | LH1LH2CON10 | (6/8B) |
| X82 C11 | LH1LH2CON11 | (6/8B) |
| X82 C12 | LH1LH2CON12 | (6/8B) |
| X82 D1 | LH2LH1CON1 | (6/8C) |
| X82 D2 | LH2LH1CON2 | (6/8C) |
| X82 D3 | LH2LH1CON3 | (6/8C) |
| X82 D4 | LH2LH1CON4 | (6/8C) |
| X82 D5 | LH2LH1CON5 | (6/8C) |
| X82 D6 | LH2LH1CON6 | (6/8C) |
| X82 D7 | LH2LH1CON7 | (6/8C) |
| X82 D8 | LH2LH1CON8 | (6/8C) |
| X82 D9 | LH2LH1CON9 | (6/8C) |
| X82 D10 | LH2LH1CON10 | (6/8C) |
| X82 D11 | LH2LH1CON11 | (6/8C) |
| X82 D12 | LH2LH1CON12 | (6/8C) |
| X83 A1 | | |
| X83 A2 | | |
| X83 A3 | | |
| X83 A4 | SD0 | (2/6F,3/8B,4/6C,4/11C,5/11C) (6/9C,8/9B,11/6C,11/11A) (12/6A) |
| X83 A5 | SD1 | |
| X83 A6 | SD2 | |
| X83 A7 | SD3 | |
| X83 A8 | SD4 | |
| X83 A9 | SD5 | |
| X83 A10 | SD6 | |
| X83 A11 | SD7 | |
| X83 A12 | LH1DID3 | (7/8B) |
| X83 A13 | LH1DID2 | (7/8B) |
| X83 A14 | LH1DID1 | (7/8B) |
| X83 A15 | LH1DID0 | (7/8B) |
| X83 A16 | LH1DQD3 | (7/8C) |
| X83 A17 | LH1DQD2 | (7/8C) |
| X83 A18 | LH1DQD1 | (7/8C) |
| X83 A19 | LH1DQD0 | (7/8C) |
| X83 A20 | | |
| X83 A21 | LH1MQD9 | (8/2C) |
| X83 A22 | LH1MQD8 | (8/2C) |
| X83 A23 | IOW | (2/2E,3/8C,5/8D,6/8D,8/8C) (11/2C,11/11D,12/11B) |
| X83 A24 | IOR | (2/2E,3/8C,5/8D,6/8D,8/8C) (11/2C,11/11D,12/11C) |
| X83 A25 | SMEMR | (2/2C,3/8C,4/5D,4/11D,5/8C) (6/8E,8/8C,11/2B,11/11E) |
| X83 A26 | SMEMW | (2/2C,3/8C,4/5D,4/11D,5/8C) (6/8E,8/8C,11/2C,11/11E) |
| X83 A27 | | |
| X83 A28 | LH1SCIEXTRXD | (8/2D) |
| X83 A29 | LH1SCIEXTTXD | (8/2D) |
| X83 A30 | LH1SCIEXTSCLK | (8/2D) |
| X83 A31 | LH1NETCLKOUT (n.c.) | |
| X83 A32 | | |
| | C210 +5.2V 10N | |
| | C211 +3.3V 10N | |

| COMPONENT/PIN | SIGNAL | ON SHEET |
|---|---|---|
| **UNIVERSAL SIGN. UNIT 1** | | |
| X83 B1 | SA0 | (2/6E,3/8D,4/6B,4/11B,5/11B) (6/11B,8/9C,11/6B,11/8A,12/6C) |
| X83 B2 | SA1 | |
| X83 B3 | SA2 | |
| X83 B4 | SA3 | |
| X83 B5 | SA4 | |
| X83 B6 | SA5 | |
| X83 B7 | SA6 | |
| X83 B8 | SA7 | |
| X83 B9 | SA8 | |
| X83 B10 | SA9 | |
| X83 B11 | SA10 | |
| X83 B12 | SA11 | |
| X83 B13 | LH1MIOCLK | (8/2C) |
| X83 B14 | LH1MID11 | (8/2B) |
| X83 B15 | LH1MID10 | (8/2B) |
| X83 B16 | LH1MID9 | (8/2B) |
| X83 B17 | LH1MID8 | (8/2B) |
| X83 B18 | LH1MQD11 | (8/2C) |
| X83 B19 | LH1MQD10 | (8/2C) |
| X83 B20 | | |
| X83 B21 R253 100 | DIAGNOSE | (3/2D,5/2D,6/10C,7/2C,10/8C) (13/11C,16/2C) |
| X83 B22 | | |
| X83 B23 | LH1SECEXTI (n.c.) | |
| X83 B24 | | |
| X83 B25 | LH1SECEXTQ (n.c.) | |
| X83 B26 | | |
| X83 B27 | LH1PRIEXTRAMP (n.c.) | |
| X83 B28 | | |
| X83 B29 | LH1PRIEXTI (n.c.) | |
| X83 B30 | | |
| X83 B31 | LH1PRIEXTQ (n.c.) | |
| X83 B32 | | |
| X83 C1 | | |
| X83 C2 | | |
| X83 C3 | LH1MID1 | (8/2B) |
| X83 C4 | LH1MID2 | (8/2B) |
| X83 C5 | LH1MID3 | (8/2B) |
| X83 C6 | LH1MID4 | (8/2B) |
| X83 C7 | LH1MID5 | (8/2B) |
| X83 C8 | LH1MID6 | (8/2B) |
| X83 C9 | LH1MID7 | (8/2B) |
| X83 C10 | | |
| X83 C11 | LH1MQD1 | (8/2C) |
| X83 C12 | LH1MQD2 | (8/2C) |
| X83 C13 | LH1MQD3 | (8/2C) |
| X83 C14 | LH1MQD4 | (8/2C) |
| X83 C15 | LH1MQD5 | (8/2C) |
| X83 C16 | LH1MQD6 | (8/2C) |
| X83 C17 | LH1MQD7 | (8/2C) |
| X83 C18 | | |
| X83 C19 | LH1TBUS1 | (8/2C,10/10D) |
| X83 C20 | LH1TBUS2 | (8/2C,10/10D) |
| X83 C21 | LH1TBUS3 | (8/2C,10/10D) |
| X83 C22 | LH1TBUS4 | (8/2D,10/10D) |
| X83 C23 | LH1TBUS5 | (8/2D,10/10D) |
| X83 C24 | LH1SIGINT | (3/2C,7/5D) |
| X83 C25 | POWERINT | (6/10E,7/5D,13/11C) |
| X83 C26 | | |
| X83 C27 | LH1CSDPRAM | (7/5D) |
| X83 C28 | LH1CSLHCONTROL | (7/5D) |
| X83 C29 | LH1DRVENABLE | (7/5D) |
| X83 C30 | LH1DRVDIR | (7/5D) |
| X83 C31 | LH1LHINT | (7/5D) |
| X83 C32 | | |

| | | | | | |
|---|---|---|---|---|---|
| ROHDE&SCHWARZ | Benennung: MOTHERBOARD–SET | | | Sprache: / Lang.: DE | Aei: / C.I.: 02.02 | Blatt: / Sh.: 9+ |
| Typ: Type: | Datum: 02–01–25 | Abteilung: 1CMK | Name: BERNDT | Zeichn. Nr.: / Drawing No. 1100.0908.01 S | | |
| 1. Z., used in: 1100.0008.01 | TOP/TOP.9 | | | | | |

Fuer diese Unterlage behalten wir uns alle Rechte vor
For this document all rights are reserved

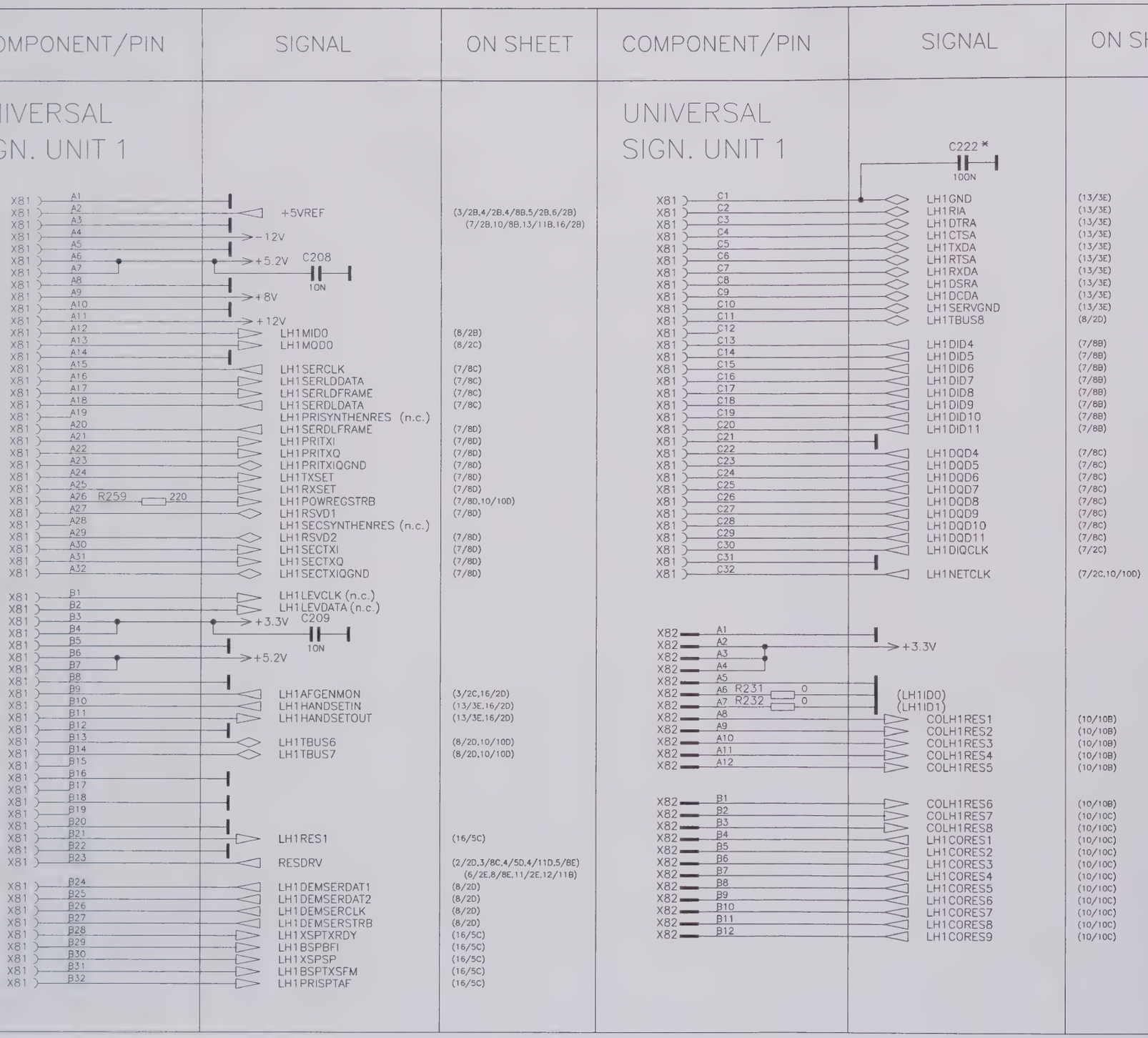

| COMPONENT/PIN | SIGNAL | ON SHEET | COMPONENT/PIN | SIGNAL | ON SHEET |
|---|---|---|---|---|---|
| USU1<br>CO-PROCESSOR | 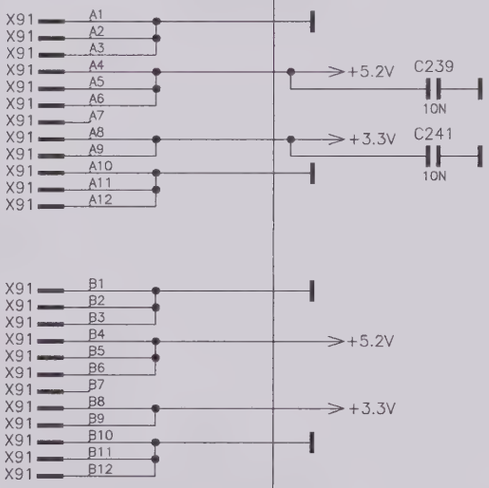 | | USU1<br>CO-PROCESSOR | 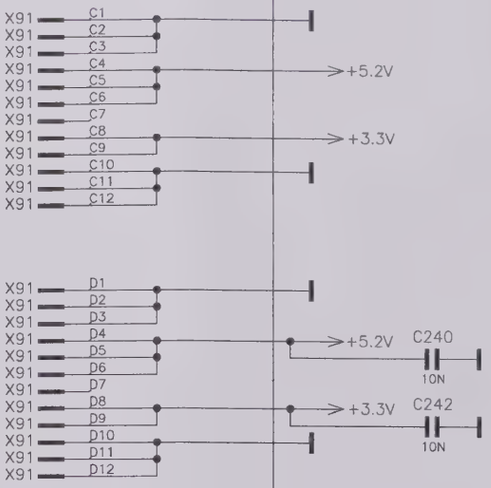 | |





Fuer diese Unterlage behalten wir uns alle Rechte vor
For this document all rights are reserved

# DEFINITIONS MB1

| COMPONENT/PIN | SIGNAL | ON SHEET |
|---|---|---|
| **USU1 CO-PROCESSOR** | | |
| X92 A1 | | |
| X92 A2 | +5VREF | (3/2B,4/2B,4/8B,5/2B,6/2B) (7/2B,9/2B,13/11B,16/2B) |
| X92 A3 | | |
| X92 A4 | -12V | |
| X92 A5 | | |
| X92 A6 | +5.2V C203 10N | |
| X92 A7 | | |
| X92 A8 | | |
| X92 A9 | +8V | |
| X92 A10 | | |
| X92 A11 | +12V | |
| X92 A12 | | |
| X92 A13 | | |
| X92 A14 | | |
| X92 A15 | | |
| X92 A16 | | |
| X92 A17 | +3.3V C204 10N | |
| X92 A18 | | |
| X92 A19 | | |
| X92 A20 | | |
| X92 A21 | | |
| X92 A22 | AUXI2CSDA | (3/2C,5/2C,7/2D,14/11C) |
| X92 A23 | AUXI2CSCL | (3/2C,5/2C,7/2D,14/11C) |
| X92 A24 | | |
| X92 B1 | | |
| X92 B2 R254 100 | DIAGNOSE | (3/2D,5/2D,6/10C,7/2C,9/10C) (13/11C,16/2C) |
| X92 B3 | | |
| X92 B4 | -12V | |
| X92 B5 | | |
| X92 B6 | +5.2V | |
| X92 B7 | | |
| X92 B8 | | |
| X92 B9 | +8V | |
| X92 B10 | | |
| X92 B11 | +12V | |
| X92 B12 | | |
| X92 B13 | RXTX1RES1 | (4/2C,5/2D,7/8D) |
| X92 B14 | RXTX1RES2 | (4/2C,5/2D) |
| X92 B15 | RXTX1RES3 | (4/2C,5/2D) |
| X92 B16 | RXTX2RES1 | (4/8C,5/2D,7/10D) |
| X92 B17 | RXTX2RES2 | (4/8C,5/2D) |
| X92 B18 | RXTX2RES3 | (4/8C,5/2D) |
| X92 B19 | +3.3V | |
| X92 B20 | | |
| X92 B21 | | |
| X92 B22 | | |
| X92 B23 | | |
| X92 B24 | | |

| COMPONENT/PIN | SIGNAL | ON SHEET |
|---|---|---|
| **USU1 CO-PROCESSOR** | | |
| X92 C1 | | |
| X92 C2 | | |
| X92 C3 | | |
| X92 C4 | | |
| X92 C5 | | |
| X92 C6 | +5.2V | |
| X92 C7 | | |
| X92 C8 | COLH1RES1 | (9/5D) |
| X92 C9 | COLH1RES2 | (9/5D) |
| X92 C10 | COLH1RES3 | (9/5D) |
| X92 C11 | COLH1RES4 | (9/5D) |
| X92 C12 | COLH1RES5 | (9/5D) |
| X92 C13 | COLH1RES6 | (9/5D) |
| X92 C14 | COLH1RES7 | (9/5D) |
| X92 C15 | COLH1RES8 | (9/5D) |
| X92 C16 | LH1CORES1 | (9/5D) |
| X92 C17 | LH1CORES2 | (9/5E) |
| X92 C18 | LH1CORES3 | (9/5E) |
| X92 C19 | LH1CORES4 | (9/5E) |
| X92 C20 | LH1CORES5 | (9/5E) |
| X92 C21 | LH1CORES6 | (9/5E) |
| X92 C22 | LH1CORES7 | (9/5E) |
| X92 C23 | LH1CORES8 | (9/5E) |
| X92 C24 | LH1CORES9 | (9/5E) |
| X92 D1 | | |
| X92 D2 | | |
| X92 D3 | | |
| X92 D4 | | |
| X92 D5 | | |
| X92 D6 | +5.2V C238 10N | |
| X92 D7 | | |
| X92 D8 | LH1TBUS1 | (8/2C,9/10D) |
| X92 D9 | LH1TBUS2 | (8/2C,9/10D) |
| X92 D10 | LH1TBUS3 | (8/2C,9/10D) |
| X92 D11 | LH1TBUS4 | (8/2D,9/10E) |
| X92 D12 | LH1TBUS5 | (8/2D,9/10E) |
| X92 D13 | LH1TBUS6 | (8/2D,9/2D) |
| X92 D14 | LH1TBUS7 | (8/2D,9/2D) |
| X92 D15 | | |
| X92 D16 | | |
| X92 D17 | | |
| X92 D18 | | |
| X92 D19 | | |
| X92 D20 | | |
| X92 D21 | | |
| X92 D22 R260 220 | LH1POWREGSTRB | (7/8D,9/2C) |
| X92 D23 R261 220 | LH2POWREGSTRB | (6/2C,7/10D) |
| X92 D24 | LH1NETCLK | (7/2C,9/5C) |

| | | | | | | |
|---|---|---|---|---|---|---|
| ROHDE&SCHWARZ | Benennung. Designation: MOTHERBOARD-SET | | | | Sprache: / Lang.: DE | Aei / C I 02.02 | Blatt: / Sh.: 10+ |
| Typ: Type: | Datum: Date: 02-01-25 | Abteilung: Dpt: 1CMK | Name Name BERNDT | | Zeichn. Nr.: / Drawing No.: 1100.0908.01 S | | |
| 1. Z.: used in: 1100.0008.01 | | | | TOP/TOP.10 | | | |

NITIONS MB1

# ISA–TERMINATION

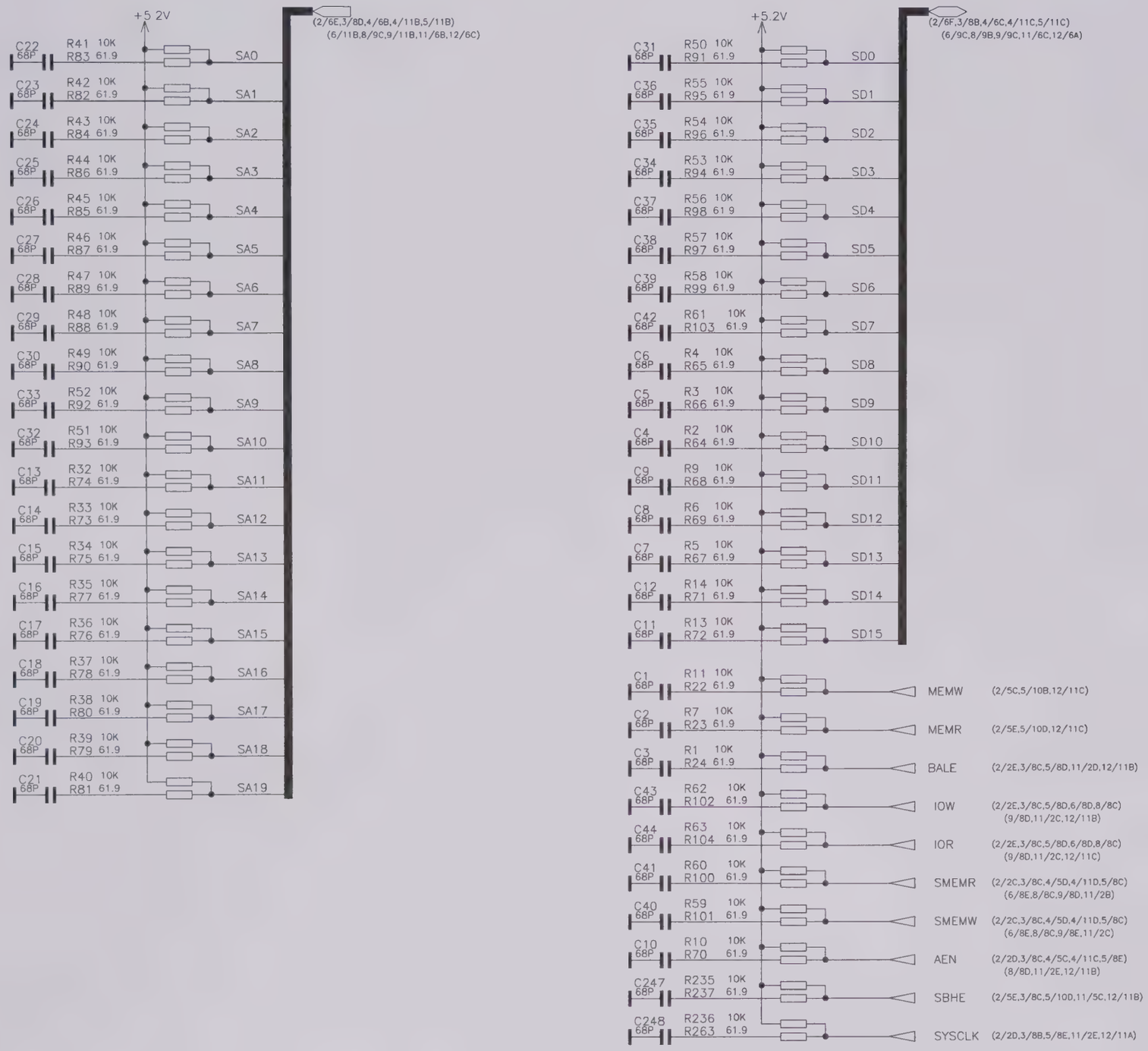


| | | | | | |
|---|---|---|---|---|---|
| ROHDE&SCHWARZ | Benennung. / Designation: MOTHERBOARD–SET | | | Sprache: / Lang.: DE | Aei / C I: 02.02 | Blatt / Sh: 11+ |
| Typ: / Type: | Datum: / Date: 02–01–25 | Abteilung: / Dpt: 1CMK | Name: / Name: BERNDT | Zeichn. Nr.: / Drawing No.: 1100.0908.01 S | | |
| 1. Z.: / used in: 1100.0008.01 | TOP/TOP.11 | | | | | |

# CONNECTOR DEF

| COMPONENT/PIN | SIGNAL | ON SHEET | COMPONENT/PIN | SIGNAL | ON SHEET |
|---|---|---|---|---|---|
| USU1 CO-PROCESSOR | | | USU1 CO-PROCESSOR | | |
| X93 A1 | +12V | | X93 C1 | | |
| X93 A2 | -12V | | | | |
| X93 A3 | | | X93 C2 | SA0 | (2/6E,3/8D,4/6B,4/11B,5/11B) (6/11B,8/9C,9/11B,11/8A,12/6 |
| X93 A4 | +5.2V C205 10N | | X93 C3 | SA2 | |
| X93 A5 | | | X93 C4 | SA4 | |
| X93 A6 | | | X93 C5 | SA6 | |
| X93 A7 | | | X93 C6 | SA8 | |
| X93 A8 | | | X93 C7 | SA10 | |
| X93 A9 | SMEMR | (2/2C,3/8C,4/5D,4/11D,5/8C) (6/8E,8/8C,9/8D,11/11E) | X93 C8 | SA12 | |
| X93 A10 | SMEMW | (2/2C,3/8C,4/5D,4/11D,5/8C) (6/8E,8/8C,9/8E,11/11E) | X93 C9 | SA14 | |
| X93 A11 | | | X93 C10 | SA16 | |
| X93 A12 | | | X93 C11 | SA18 | |
| X93 A13 | | | X93 C12 | | |
| X93 A14 | | | X93 C13 | | |
| X93 A15 | | | X93 C14 | | |
| X93 A16 | | | X93 C15 | | |
| X93 A17 | | | X93 C16 | | |
| X93 A18 | | | X93 C17 | | |
| X93 A19 | | | X93 C18 | | |
| X93 A20 | | | | | |
| X93 A21 | | | X93 C19 | SD8 | (2/6F,3/8B,4/6C,4/11C,5/11C) (6/9C,8/9B,9/9C,11/11A,12/6A |
| X93 A22 | | | X93 C20 | SD10 | |
| X93 A23 | | | X93 C21 | SD12 | |
| X93 A24 | | | X93 C22 | SD14 | |
| | | | X93 C23 | MEMCS16 | (2/5B,5/10C,12/7C) |
| X93 B1 | IOR | (2/2E,3/8C,5/8D,6/8D,8/8C) (9/8D,11/11D,12/11C) | X93 C24 | | |
| X93 B2 | IOW | (2/2E,3/8C,5/8D,6/8D,8/8C) (9/8D,11/11D,12/11B) | X93 D1 | | |
| X93 B3 | BALE | (2/2E,3/8C,5/8D,11/11D,12/11B) | X93 D2 | SBHE | (2/5E,3/8C,5/10D,11/11E)(12/11 |
| X93 B4 | | | X93 D3 | SA1 | |
| X93 B5 | | | X93 D4 | SA3 | |
| X93 B6 | | | X93 D5 | SA5 | |
| X93 B7 | | | X93 D6 | SA7 | |
| X93 B8 | | | X93 D7 | SA9 | |
| X93 B9 | | | X93 D8 | SA11 | |
| X93 B10 | SD0 | | X93 D9 | SA13 | |
| X93 B11 | SD1 | | X93 D10 | SA15 | |
| X93 B12 | SD2 | | X93 D11 | SA17 | |
| X93 B13 | SD3 | | X93 D12 | SA19 | |
| X93 B14 | SD4 | | X93 D13 | | |
| X93 B15 | SD5 | | X93 D14 | | |
| X93 B16 | SD6 | | X93 D15 | | |
| X93 B17 | SD7 | | X93 D16 | | |
| X93 B18 | | | X93 D17 | | |
| X93 B19 | IOCHRDY | (2/2D,3/8C,4/5D,4/11D,5/8E) (12/7C) | X93 D18 | | |
| X93 B20 | AEN | (2/2D,3/8C,4/5C,4/11C,5/8E) (8/8D,11/11E,12/11B) | X93 D19 | | |
| X93 B21 | RESDRV | (2/2D,3/8C,4/5D,4/11D,5/8E) (6/2E,8/8E,9/2E,12/11B) | X93 D20 | SD9 | |
| X93 B22 | OWS | (2/2D,5/8E,12/7C) | X93 D21 | SD11 | |
| X93 B23 | | | X93 D22 | SD13 | |
| X93 B24 | SYSCLK | (2/2D,3/8B,5/8E,11/11E,12/11A) | X93 D23 | SD15 | |
| | | | X93 D24 | IOCS16 | (2/5D,3/8C,5/10E,8/8C,12/7C) |

For this document all rights are reserved

Fuer diese Unterlage behalten wir uns alle Rechte vor
For this document all rights are reserved

| COMPONENT/PIN | SIGNAL | ON SHEET |
|---|---|---|

## PC CARD

| | | | | | | |
|---|---|---|---|---|---|---|
| X216 | 34 | PC_SD0 | R191 | 27.4 | SD0 | (2/6F,3/8B,4/6C,4/11C,5/11C) (6/9C,8/9B,9/9C,11/6C,11/11A) |
| X216 | 33 | | | | | |
| X216 | 32 | PC_SD1 | R190 | 27.4 | SD1 | |
| X216 | 31 | | | | | |
| X216 | 30 | PC_SD2 | R189 | 27.4 | SD2 | |
| X216 | 29 | | | | | |
| X216 | 28 | PC_SD3 | R188 | 27.4 | SD3 | |
| X216 | 27 | | | | | |
| X216 | 26 | PC_SD4 | R187 | 27.4 | SD4 | |
| X216 | 25 | | | | | |
| X216 | 24 | PC_SD5 | R186 | 27.4 | SD5 | |
| X216 | 23 | | | | | |
| X216 | 22 | PC_SD6 | R185 | 27.4 | SD6 | |
| X216 | 21 | | | | | |
| X216 | 20 | PC_SD7 | R192 | 27.4 | SD7 | |
| X216 | 19 | | | | | |
| X216 | 18 | PC_SD8 | R200 | 27.4 | SD8 | |
| X216 | 17 | | | | | |
| X216 | 16 | PC_SD9 | R199 | 27.4 | SD9 | |
| X216 | 15 | | | | | |
| X216 | 14 | PC_SD10 | R198 | 27.4 | SD10 | |
| X216 | 13 | | | | | |
| X216 | 12 | PC_SD11 | R197 | 27.4 | SD11 | |
| X216 | 11 | | | | | |
| X216 | 10 | PC_SD12 | R196 | 27.4 | SD12 | |
| X216 | 9 | | | | | |
| X216 | 8 | PC_SD13 | R195 | 27.4 | SD13 | |
| X216 | 7 | | | | | |
| X216 | 6 | PC_SD14 | R194 | 27.4 | SD14 | |
| X216 | 5 | | | | | |
| X216 | 4 | PC_SD15 | R193 | 27.4 | SD15 | |
| X216 | 3 | | | | | |
| X216 | 2 | | | | | |
| X216 | 1 | R173 0 * | | | | |

| | | | | | | |
|---|---|---|---|---|---|---|
| X217 | 16 | PC_SA15 | R141 | 68 | SA15 | (2/6E,3/8D,4/6B,4/11B,5/11B) (6/11B,8/9C,9/11B,11/6B,11/8A) |
| X217 | 17 | PC_SA14 | R142 | 68 | SA14 | |
| X217 | 18 | PC_SA13 | R143 | 68 | SA13 | |
| X217 | 19 | PC_SA12 | R144 | 68 | SA12 | |
| X217 | 20 | | R145 | 68 | SA11 | |
| X217 | 21 | PC_SA11 | R146 | 68 | SA10 | |
| X217 | 22 | PC_SA10 | R147 | 68 | SA9 | |
| X217 | 23 | PC_SA9 | R148 | 68 | SA8 | |
| X217 | 24 | PC_SA8 | | | | |

D5 74HCT245T — R179 1K — 19 G3 3EN1 3EN2 1

| | | | | | | |
|---|---|---|---|---|---|---|
| X217 | 25 | | R133 | 68 | SA7 | |
| X217 | 26 | PC_SA7 | R134 | 68 | SA6 | |
| X217 | 27 | PC_SA6 | R135 | 68 | SA5 | |
| X217 | 28 | PC_SA5 | R136 | 68 | SA4 | |
| X217 | 29 | PC_SA4 | R137 | 68 | SA3 | |
| X217 | 30 | | R138 | 68 | SA2 | |
| X217 | 31 | PC_SA3 | R139 | 68 | SA1 | |
| X217 | 32 | PC_SA2 | R140 | 68 | SA0 | |
| X217 | 33 | PC_SA1 | | | | |
| X217 | 34 | PC_SA0 | | | | |

D4 74HCT245T — R178 1K — 19 G3 3EN1 3EN2 1

+5 2V — C48 100N — 20 — D4 74HCT245T

# ONS MB1

| | SIGNAL | ON SHEET |
|---|---|---|
| PC CARD | | |

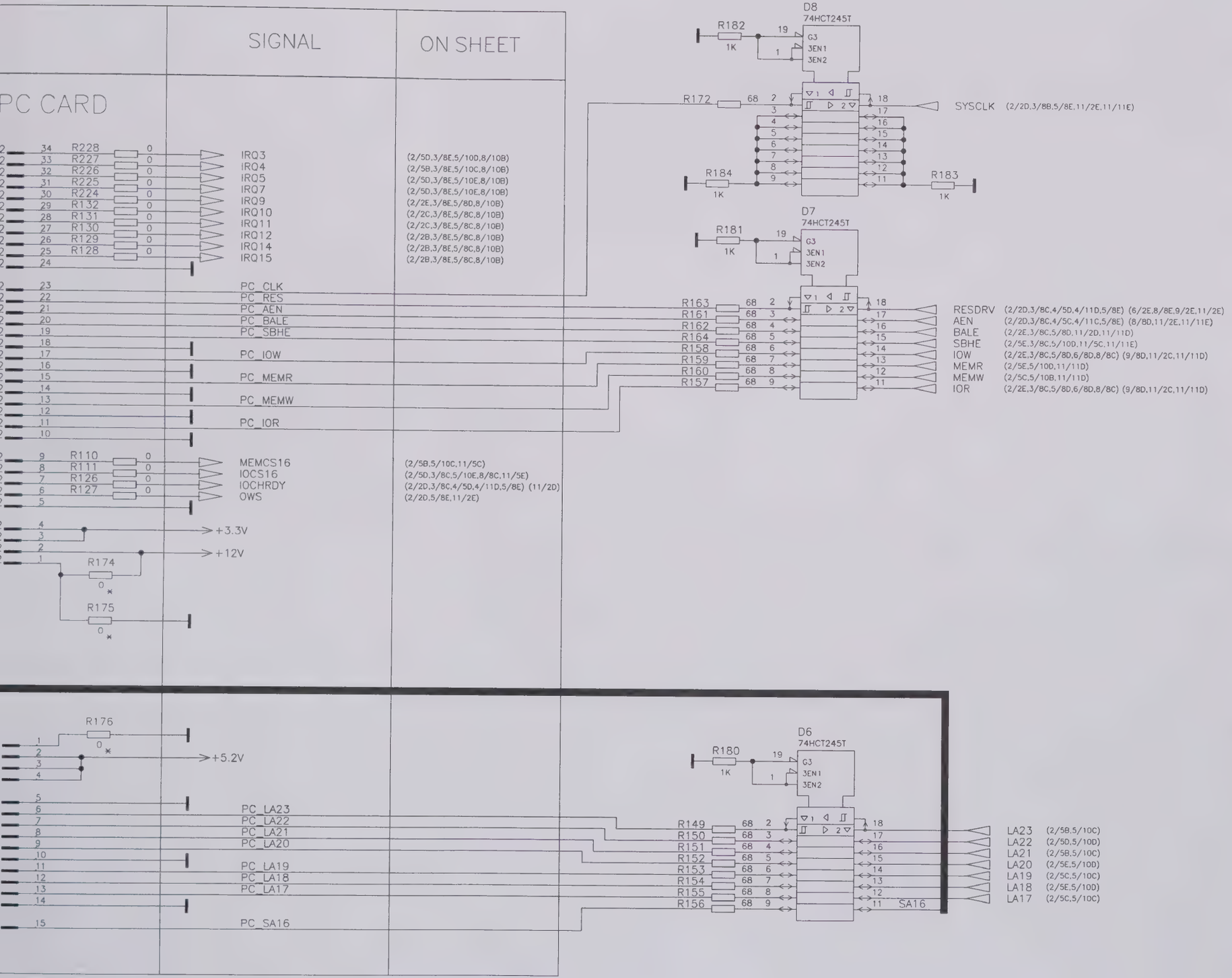


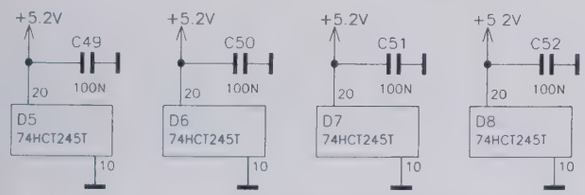


| | | | | | |
|---|---|---|---|---|---|
| ROHDE&SCHWARZ | Benennung: / Designation: MOTHERBOARD-SET | | | Sprache: / Lang.: DE | Aei / C I.: 02.02 | Blatt: / Sh.: 12+ |
| Typ: / Type | Datum: / Date 02-01-25 | Abteilung: / Dpt: 1CMK | Name: / Name: BERNDT | Zeichn. Nr.: / Drawing No.: 1100.0908.01 S | | |
| 1. Z.: / used in. 1100.0008.01 | TOP/TOP.12 | | | | | |

Fuer diese Unterlage behalten wir uns die Rechte vor
For this document all rights are reserved

| COMPONENT/PIN | SIGNAL | ON SHEET |
|---|---|---|

## FRONT PANEL BOARD

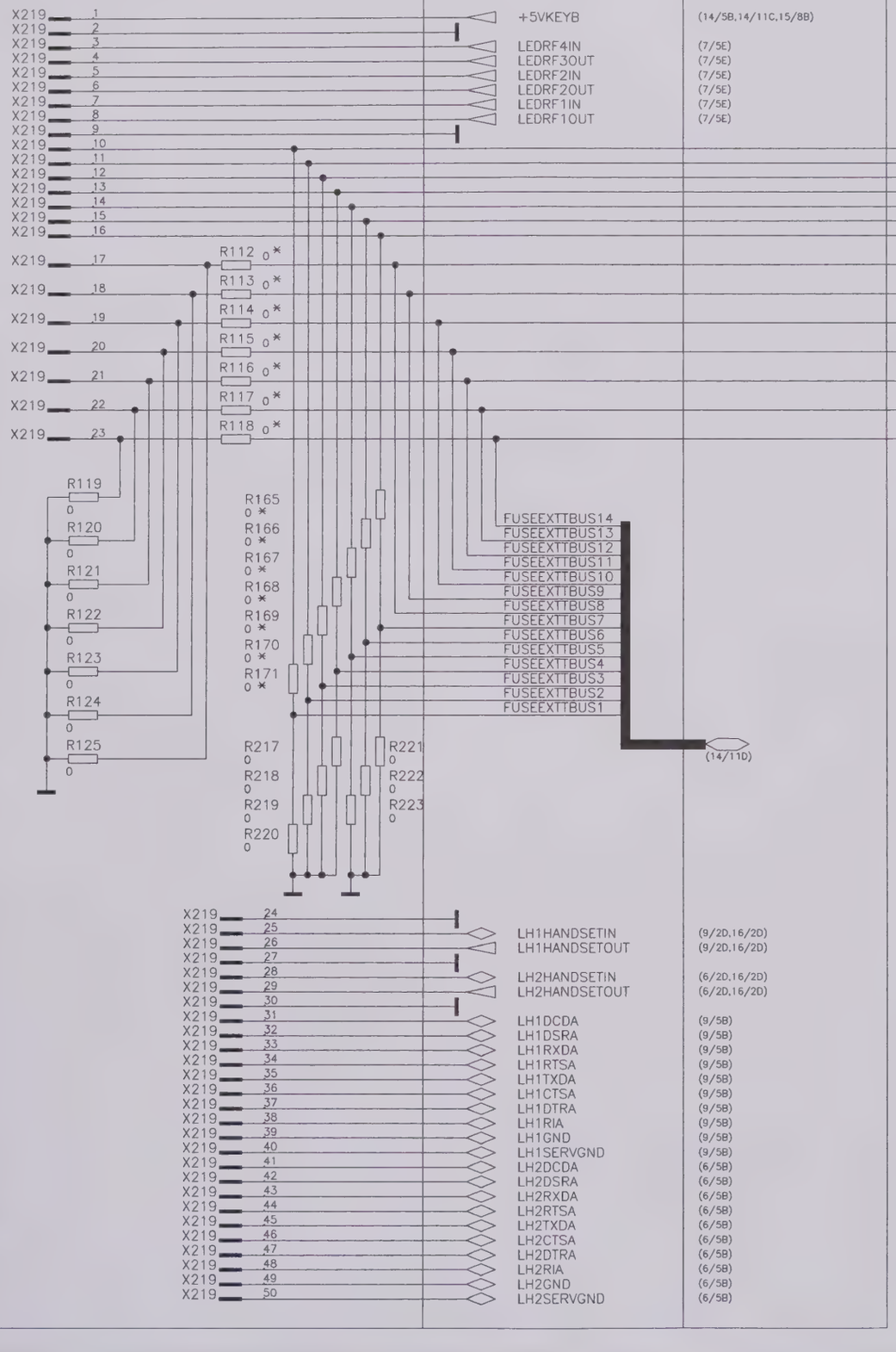


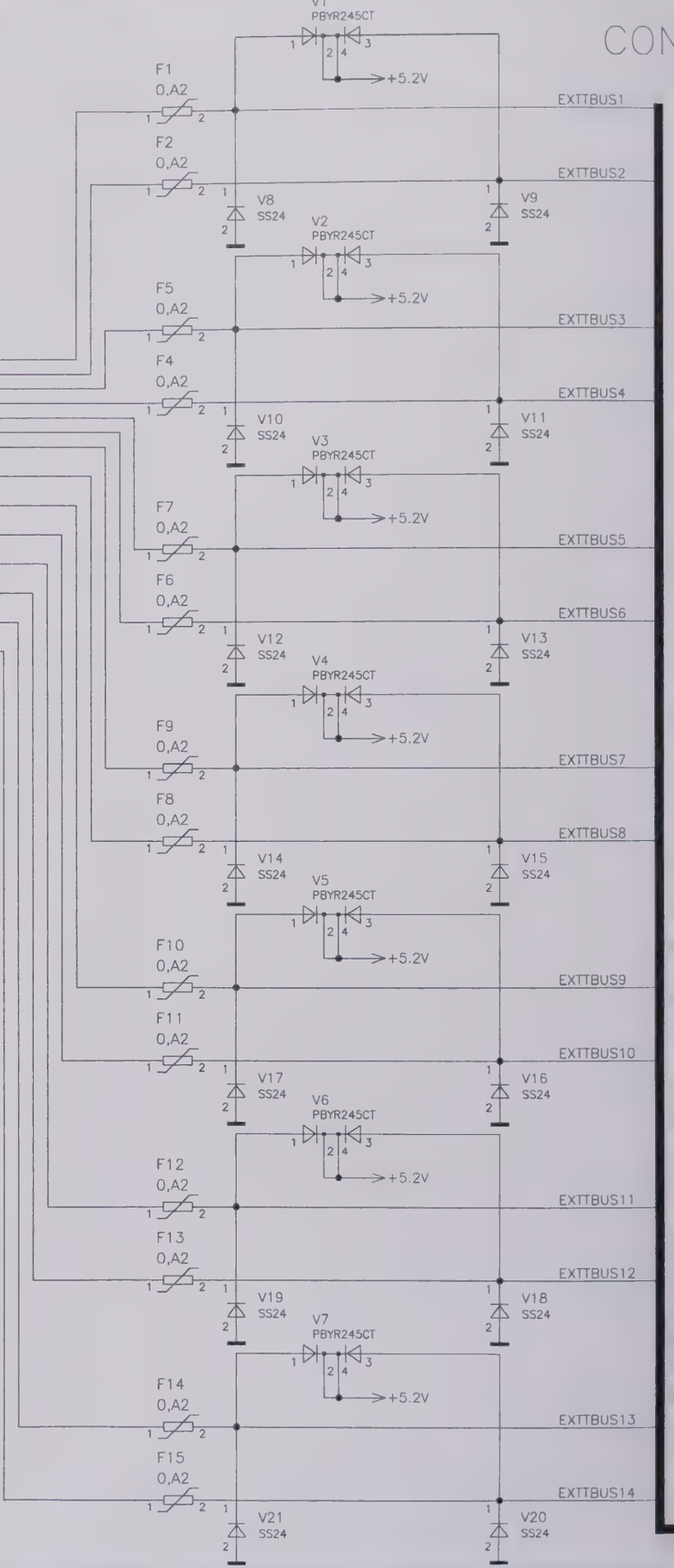

# NECTOR DEFINITIONS MB1

## OCXO BOARD

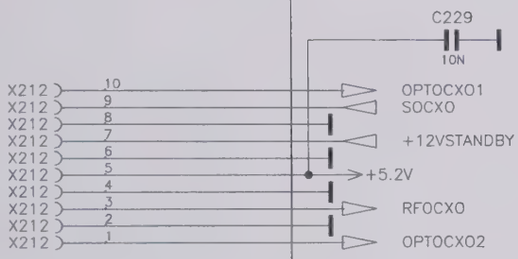


| COMPONENT/PIN | SIGNAL | ON SHEET |
|---|---|---|
| X212 10 | OPTOCXO1 | (16/2D) |
| X212 9 | SOCXO | (16/2D) |
| X212 8 | | |
| X212 7 | +12VSTANDBY | (2/10C,15/9E,15/11D,16/2C) |
| X212 6 | | |
| X212 5 | +5.2V | |
| X212 4 | | |
| X212 3 | RFOCXO | (16/2D) |
| X212 2 | | |
| X212 1 | OPTOCXO2 | (16/2D) |

## FLOPPY

| COMPONENT/PIN | SIGNAL | ON SHEET |
|---|---|---|
| X218 1 | +5.2V | |
| X218 2 | IDX | (2/8D) |
| X218 3 | +5.2V | |
| X218 4 | DS2 | (2/10C) |
| X218 5 | +5.2V | |
| X218 6 | DCHG | (2/10D) |
| X218 7 | | |
| X218 8 | | |
| X218 9 | | |
| X218 10 | MO2 | (2/8D) |
| X218 11 | | |
| X218 12 | DIRC | (2/10C) |
| X218 13 | | |
| X218 14 | STEP | (2/10D) |
| X218 15 | | |
| X218 16 | WD | (2/8D) |
| X218 17 | | |
| X218 18 | WE | (2/10C) |
| X218 19 | | |
| X218 20 | TRK0 | (2/10D) |
| X218 21 | | |
| X218 22 | WP | (2/8D) |
| X218 23 | | |
| X218 24 | RDD | (2/10C) |
| X218 25 | | |
| X218 26 | HS | (2/10D) |

## FRONTEND BOARD

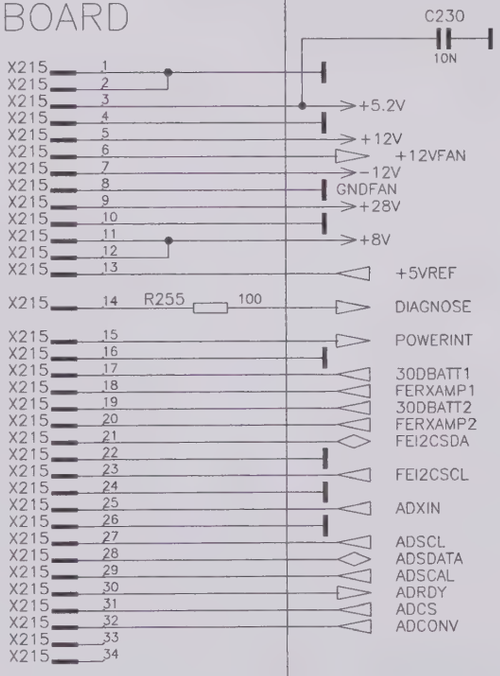


| COMPONENT/PIN | SIGNAL | ON SHEET |
|---|---|---|
| X215 1 | | |
| X215 2 | | |
| X215 3 | +5.2V | |
| X215 4 | | |
| X215 5 | +12V | |
| X215 6 | +12VFAN | (15/3D,15/6D,15/8C,15/9E) |
| X215 7 | -12V | |
| X215 8 | GNDFAN | |
| X215 9 | +28V | |
| X215 10 | | |
| X215 11 | +8V | |
| X215 12 | | |
| X215 13 | +5VREF | (3/2B,4/2B,4/8B,5/2B,6/2B) (7/2B,9/2B,10/8B,16/2B) |
| X215 14 | DIAGNOSE | (3/2D,5/2D,6/10C,7/2C,9/10C) (10/8C,16/2C) |
| X215 15 | POWERINT | (6/10E,7/5D,9/10E) |
| X215 16 | | |
| X215 17 | 30DBATT1 | (4/2C) |
| X215 18 | FERXAMP1 | (4/2C) |
| X215 19 | 30DBATT2 | (4/8C) |
| X215 20 | FERXAMP2 | (4/8C) |
| X215 21 | FEI2CSDA | (7/2D) |
| X215 22 | | |
| X215 23 | FEI2CSCL | (7/2D) |
| X215 24 | | |
| X215 25 | ADXIN | (7/2D) |
| X215 26 | | |
| X215 27 | ADSCL | (7/2D) |
| X215 28 | ADSDATA | (7/2D) |
| X215 29 | ADSCAL | (7/2D) |
| X215 30 | ADRDY | (7/2D) |
| X215 31 | ADCS | (7/2D) |
| X215 32 | ADCONV | (7/2D) |
| X215 33 | | |
| X215 34 | | |

(7/3E)

| | | | | | | | |
|---|---|---|---|---|---|---|---|
| ROHDE&SCHWARZ | Benennung: / Designation: MOTHERBOARD-SET | | | | Sprache: / Lang.: DE | Aei: / C.I.: 02.02 | Blatt: / Sh.: 13+ |
| Typ: / Type: | Datum: / Date: 02-01-25 | Abteilung: / Dpt: 1CMK | Name: / Name: BERNDT | | Zeichn. Nr.: / Drawing No.: 1100.0908.01 S | | |
| 1. Z., used in: 1100.0008.01 | TOP/TOP.13 | | | | | | |

# CONNECTOR

| COMPONENT/PIN | SIGNAL | ON SHEET | COMPONENT/PIN | SIGNAL | ON SHEET |
|---|---|---|---|---|---|
| REAR PANEL BOARD 1 | | | REAR PANEL BOARD 1 | | |
| X205 1 | D4 | (2/10C) | X206 1 | +5VKEYB | (13/3A,14/11C,15/8B) |
| X205 2 | D0 | (2/8D) | X206 2 | | |
| X205 3 | D5 | (2/10D) | X206 3 | MSDAT | (2/10C) |
| X205 4 | D1 | (2/10C) | X206 4 | KEYCLK | (2/8D) |
| X205 5 | D6 | (2/8D) | X206 5 | MSCLK | (2/10D) |
| X205 6 | D2 | (2/10D) | X206 6 | KEYDAT | (2/10C) |
| X205 7 | D7 | (2/10B) | X206 7 | | |
| X205 8 | D3 | (2/8D) | X206 8 | RI2 | (2/8D) |
| X205 9 | REN | (2/10D) | X206 9 | DTR2 | (2/10D) |
| X205 10 | EOI | (2/10B) | X206 10 | CTS2 | (2/10C) |
| X205 11 | DAV | (2/8D) | X206 11 | TXD2 | (2/8D) |
| X205 12 | NRFD | (2/10D) | X206 12 | RTS2 | (2/10D) |
| X205 13 | NDAC | (2/10B) | X206 13 | RXD2 | (2/10C) |
| X205 14 | IFC | (2/8D) | X206 14 | DSR2 | (2/8D) |
| X205 15 | SRQ | (2/10D) | X206 15 | DCD2 | (2/10D) |
| X205 16 | ATN | (2/10B) | X206 16 | | |
| X205 17 | | | X206 17 | RI1 | (2/10B) |
| X205 18 | SLCT | (2/10C) | X206 18 | DTR1 | (2/8C) |
| X205 19 | PE | (2/8C) | X206 19 | CTS1 | (2/10C) |
| X205 20 | BUSY | (2/10B) | X206 20 | TXD1 | (2/10B) |
| X205 21 | ACK | (2/10C) | X206 21 | RTS1 | (2/8C) |
| X205 22 | PD7 | (2/8C) | X206 22 | RXD1 | (2/10C) |
| X205 23 | PD6 | (2/10B) | X206 23 | DSR1 | (2/10B) |
| X205 24 | PD5 | (2/10C) | X206 24 | DCD1 | (2/8C) |
| X205 25 | PD4 | (2/8D) | X206 25 | | |
| X205 26 | PD3 | (2/10B) | X206 26 | HSYNC | (2/8B,14/2F) |
| X205 27 | SLIN | (2/10C) | X206 27 | VSYNC | (2/8B,14/2F) |
| X205 28 | PD2 | (2/8D) | X206 28 | | |
| X205 29 | INIT | (2/10B) | X206 29 | BLUE | (2/8C,14/2F) |
| X205 30 | PD1 | (2/10D) | X206 30 | | |
| X205 31 | ERR | (2/8D) | X206 31 | GREEN | (2/8B,14/2F) |
| X205 32 | PD0 | (2/10B) | X206 32 | | |
| X205 33 | AFD | (2/10D) | X206 33 | RED | (2/8B,14/2F) |
| X205 34 | STB | (2/8D) | X206 34 | | |

R15 10K * HSYNC (2/8B,14/5C)
R16 10K * VSYNC (2/8B,14/5C)
R17 10K * BLUE (2/8C,14/5C)
R18 10K * GREEN (2/8B,14/5C)
R19 10K * RED (2/8B,14/5D)

For this document all rights are reserved

# DEFINITIONS MB1

| COMPONENT/PIN | SIGNAL | ON SHEET | COMPONENT/PIN | SIGNAL | ON SHEET |
|---|---|---|---|---|---|
| REAR PANEL BOARD 2 | | | REAR PANEL BOARD 2 | | |
| X207 1 | | | X208 1 | | |
| X207 2 | EXT1MODIIN | (5/5B) | X208 2 | RXTX1SCIRXD | (4/5D) |
| X207 3 | EXT1MODQIN | (5/5B) | X208 3 | RXTX1SCITXD | (4/5D) |
| X207 4 | | | X208 4 | | |
| X207 5 | EXT1MODIOUT | (5/5B) | X208 5 | RXTX2SCIRXD | (4/11D) |
| X207 6 | EXT1MODQOUT | (5/5B) | X208 6 | RXTX2SCITXD | (4/11D) |
| X207 7 | | | X208 7 | | |
| X207 8 | EXT1DEMODIIN | (5/5C) | X208 8 | RESERVE8 (n.c.) | |
| X207 9 | EXT1DEMODQIN | (5/5C) | X208 9 | RESERVE7 (n.c.) | |
| X207 10 | | | X208 10 | | |
| X207 11 | EXT1DEMODIOUT | (5/5C) | X208 11 | RESERVE6 (n.c.) | |
| X207 12 | EXT1DEMODQOUT | (5/5C) | X208 12 | RESERVE5 (n.c.) | |
| X207 13 | | | X208 13 | RESERVE4 (n.c.) | |
| X207 14 | EXT2MODIIN | (5/5C) | X208 14 | | |
| X207 15 | EXT2MODQIN | (5/5C) | X208 15 | +5VKEYB | (13/3A,14/5B,15/8B) |
| X207 16 | | | X208 16 | | |
| X207 17 | EXT2MODIOUT | (5/5C) | X208 17 | AUXI2CSDA | (3/2C,5/2C,7/2D,10/8C) |
| X207 18 | EXT2MODQOUT | (5/5C) | X208 18 | AUXI2CSCL | (3/2C,5/2C,7/2D,10/8C) |
| X207 19 | | | X208 19 | | |
| X207 20 | EXT2DEMODIIN | (5/5C) | X208 20 | FUSEEXTTBUS1 | |
| X207 21 | EXT2DEMODQIN | (5/5C) | X208 21 | FUSEEXTTBUS2 | |
| X207 22 | | | X208 22 | FUSEEXTTBUS3 | |
| X207 23 | EXT2DEMODIOUT | (5/5C) | X208 23 | FUSEEXTTBUS4 | |
| X207 24 | EXT2DEMODQOUT | (5/5C) | X208 24 | FUSEEXTTBUS5 | |
| X207 25 | | | X208 25 | FUSEEXTTBUS6 | |
| X207 26 | | | X208 26 | FUSEEXTTBUS7 | |
| X207 27 | | | X208 27 | FUSEEXTTBUS8 | |
| X207 28 | | | X208 28 | FUSEEXTTBUS9 | |
| X207 29 | | | X208 29 | FUSEEXTTBUS10 | |
| X207 30 | | | X208 30 | FUSEEXTTBUS11 | |
| X207 31 | | | X208 31 | FUSEEXTTBUS12 | |
| X207 32 | | | X208 32 | FUSEEXTTBUS13 | |
| X207 33 | | | X208 33 | FUSEEXTTBUS14 | |
| X207 34 | | | X208 34 | | |

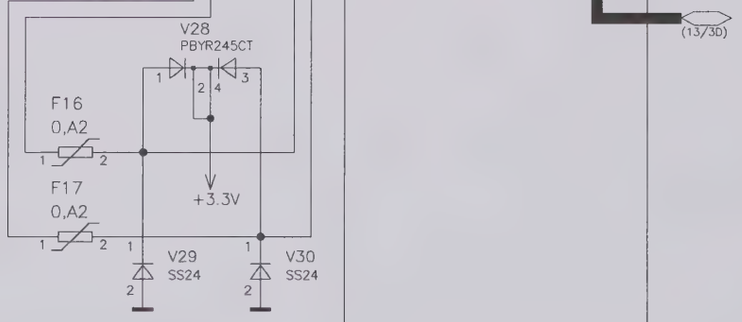


| | | | | | | |
|---|---|---|---|---|---|---|
| ROHDE&SCHWARZ | Benennung: / Designation: MOTHERBOARD–SET | | | | Sprache: / Lang.: DE | Aei / C I: 02.02 | Blatt: / Sh.: 14+ |
| Typ. / Type | Datum: / Date: 02–01–25 | Abteilung: / Dpt: 1CMK | Name: / Name: BERNDT | | Zeichn. Nr.: / Drawing No.: 1100.0908.01 S | | |
| 1. Z.. / used in: 1100.0008.01 | | | | TOP/TOP.14 | | | |

| COMPONENT/PIN | SIGNAL | ON SHEET |
|---|---|---|
| ABISSYM 1/2 | | |
| X200 1 | ABISRX2SYMA | (3/11B) |
| X200 2 | ABISRX1SYMB | (3/2D) |
| X200 3 | ABISRX2SYMB | (3/11B) |
| X200 4 | ABISTX1SYMA | (3/2D) |
| X200 5 | ABISTX2SYMA | (3/11B) |
| X200 6 | ABISTX1SYMB | (3/2D) |
| X200 7 | ABISTX2SYMB | (3/11B) |
| X200 8 | | |
| X200 9 | ABISRX1SYMA | (3/2D) |
| X200 10 R238 * 0 | | |

C166 10P, C167 10P, C243 10P, C244 10P

C165 10P, C168 10P, C245 10P, C246 10P

| COMPONENT/PIN | SIGNAL | ON SHEET |
|---|---|---|
| ABISASYM2 | | |
| X201 SMB-ST 1 2 3 4 5 | ABISRX2 | (3/11B) |
| X202 SMB-ST 1 2 3 4 5 | ABISTX2 | (3/11B) |
| ABISASYM1 | | |
| X203 SMB-ST 1 2 3 4 5 | ABISRX1 | (3/2D) |
| X204 SMB-ST 1 2 3 4 5 | ABISTX1 | (3/2D) |

FANCONTROL

C218 470N
R210 22K
R248 1.91K
FANSPEED (7/2F)
R243 12.1K
N140 LM2904D
+12VFAN (13/11B,15/6D,15/8C,15/9E)
V24 BAS216
R239 20K
R205 1.37K
R215 4.32K
GNDFAN
R240 15K
R241 15K
R245 392K
C219 10U
R203 200K
FANCONTROL1 (15/6F)
C225 100U
FAN
R230 100K
FANREG
X211
C224 470P
R246 220K
N140 LM2904D
V27 BCP68-16
R229 1K 0.25W
R212 1K
X220
C221 150N
R202 200K
R208 150K
X225 1 +5.2V
X225 2 n.c.
X225 3 TEMPSENSE2
X225 4
R244 12.1K
N141* LM2904D
V25 BAS216
R206 5 62K
R242 82.5K
R207 13K
R216 4.32K
V26 BAS216
R204 10K
R247 220K
R209 2.2K
R211 22K
V22 BC860B
V23 BC850B
C220 10U
R177 0.75 1W
R201 0.1 1W
R213 1K
N141* LM2904D
R214 1K
C216 10N
C217 10N
R12 75K
R8 33K
X210
X209

For this document all rights are reserved

# DEFINITIONS MB1

| COMPONENT/PIN | SIGNAL | ON SHEET | COMPONENT/PIN | SIGNAL | ON SHEET |
|---|---|---|---|---|---|
| POWER SUPPLY | | | POWER SUPPLY | | |
| X110 A1 | PWDOWN (n.c.) | | X110 C1 | OT | (2/8B) |
| X110 A2 | TEST 2 (n.c.) | | X110 C2 | | |
| X110 A3 | TEST 3 (n.c.) | | X110 C3 | | |
| X110 A4 | | | X110 C4 | | |
| X110 A5 | +3.3V | | X110 C5 | +3.3V | |
| X110 A6 | | | X110 C6 | | |
| X110 A7 | +5.2V | | X110 C7 | +5.2V | |
| X110 A8 | | | X110 C8 | | |
| X110 A9 | | | X110 C9 | | |
| X110 A10 | F3 1A5 | | X110 C10 | | |
| X110 A11 | +5VKEYB | (13/3A,14/5B,14/11C) | X110 C11 | | |
| X110 A12 | | | X110 C12 | | |
| X110 A13 | | | X110 C13 | | |
| X110 A14 | | | X110 C14 | | |
| X110 A15 | | | X110 C15 | | |
| X110 A16 | | | X110 C16 | +6V | |
| X110 A17 | +6V | | X110 C17 | +8V | |
| X110 A18 | +8V | | X110 C18 | | |
| X110 A19 | | | X110 C19 | | |
| X110 A20 | | | X110 C20 | | |
| X110 A21 | +12V | | X110 C21 | +12V | |
| X110 A22 | | | X110 C22 | −12V | |
| X110 A23 | | | X110 C23 | | |
| X110 A24 | +12VFAN | (13/11B,15/3D,15/6D,15/9E) | X110 C24 | | |
| X110 B1 | ONOFF | (2/8D) | X110 D1 | PWGOOD | (2/10D) |
| X110 B2 | | | X110 D2 | | |
| X110 B3 | | | X110 D3 | +28V | |
| X110 B4 | | | X110 D4 | | |
| X110 B5 | +3.3V | | X110 D5 | +3.3V | |
| X110 B6 | | | X110 D6 | | |
| X110 B7 | +5.2V | | X110 D7 | +5.2V | |
| X110 B8 | | | X110 D8 | | |
| X110 B9 | | | X110 D9 | | |
| X110 B10 | | | X110 D10 | | |
| X110 B11 | | | X110 D11 | | |
| X110 B12 | | | X110 D12 | | |
| X110 B13 | | | X110 D13 | | |
| X110 B14 | | | X110 D14 | | |
| X110 B15 | | | X110 D15 | | |
| X110 B16 | +6V | | X110 D16 | +6V | |
| X110 B17 | | | X110 D17 | +8V | |
| X110 B18 | +8V | | X110 D18 | | |
| X110 B19 | | | X110 D19 | | |
| X110 B20 | | | X110 D20 | | |
| X110 B21 | +12V | | X110 D21 | +12V | |
| X110 B22 | −12V | | X110 D22 | −12V | |
| X110 B23 | | | X110 D23 | | |
| X110 B24 | GNDFAN | | X110 D24 | +12VSTANDBY | (2/10C,13/8B,15/9E,16/2C) |

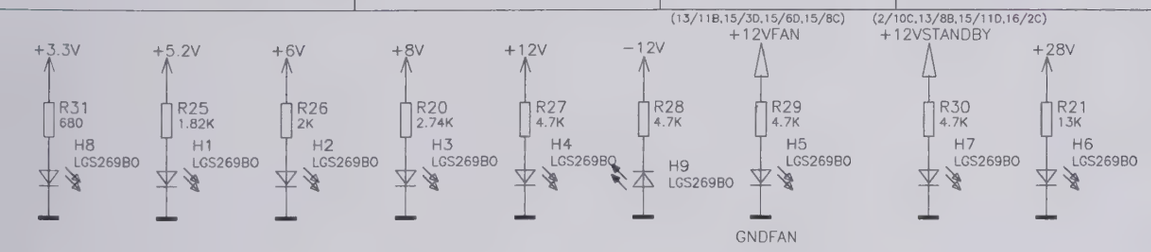


NDFAN
TEMPSENSE1 (15/6F)
FANCONTROL1 (15/5D)
NDFAN

TEMPSENSE1 (15/6F)
NDFAN

| | | | | | | | |
|---|---|---|---|---|---|---|---|
| ROHDE&SCHWARZ | Benennung: / Designation: MOTHERBOARD−SET | | | | Sprache: / Lang.: DE | Aei: / C.I.: 02.02 | Blatt: / Sh.: 15+ |
| Typ / Type | Datum / Date 02−01−25 | Abteilung: / Dpt 1CMK | Name: / Name: BERNDT | | Zeichn. Nr.: / Drawing No.: 1100.0908.01 S | | |
| 1. Z.: / used in: 1100.0008.01 | | | | TOP/TOP.15 | | | |

Fuer diese Unterlage behalten wir uns alle Rechte vor
For this document all rights are reserved

# CONNECTOR DEFINITIONS MB1

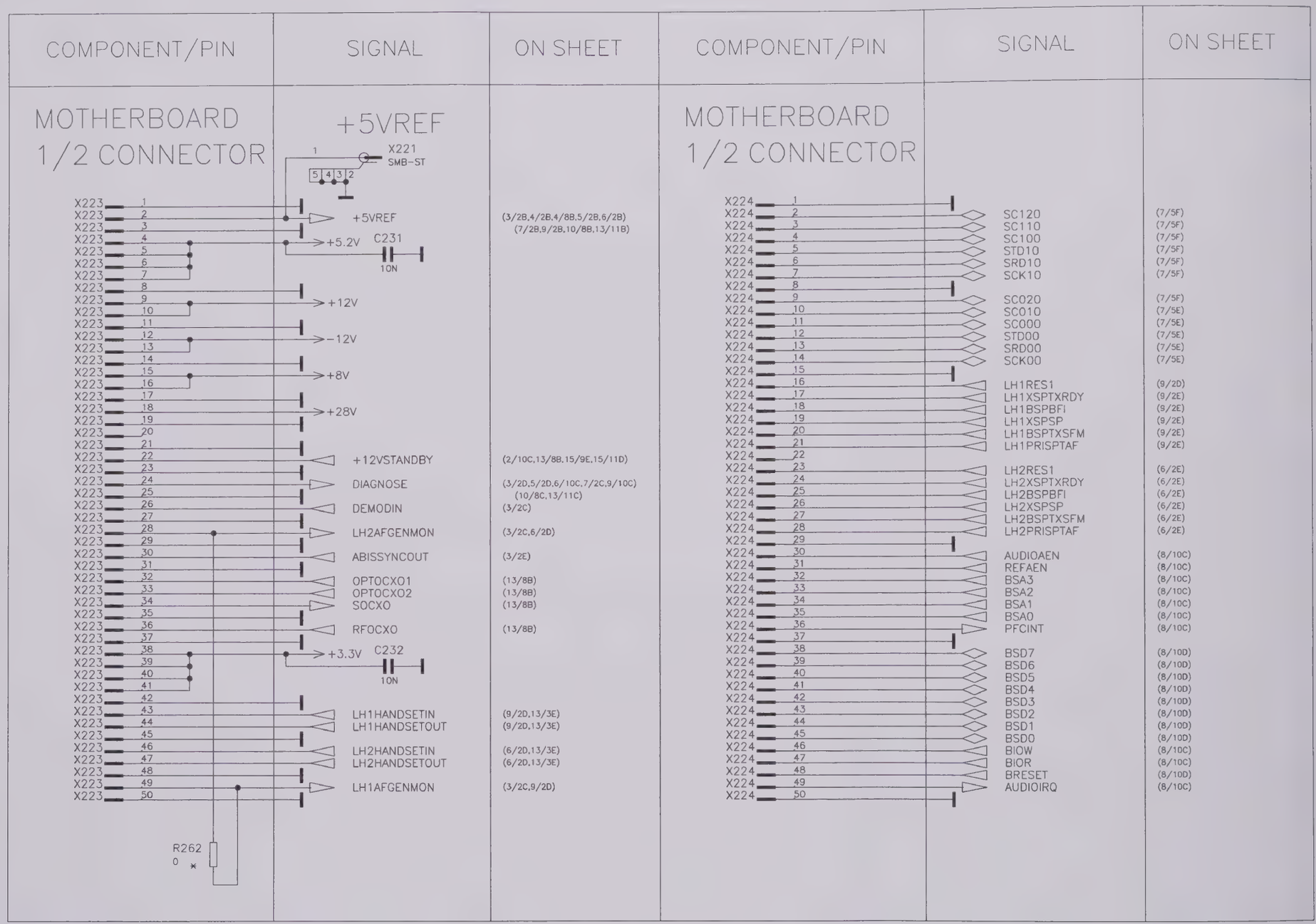

# CONNECTOR DEFINITIONS MB2

| COMPONENT/PIN | SIGNAL | ON SHEET |
|---|---|---|
| **MOTHERBOARD 1/2 CONNECTOR** | | |
| X213 1 | | |
| X213 2 | MB2+5VREF | (17/2C,17/8B) |
| X213 3 | | |
| X213 4 | +5.2V C233 10N | |
| X213 5 | | |
| X213 6 | | |
| X213 7 | | |
| X213 8 | | |
| X213 9 | +12V | |
| X213 10 | | |
| X213 11 | | |
| X213 12 | -12V | |
| X213 13 | | |
| X213 14 | | |
| X213 15 | +8V | |
| X213 16 | | |
| X213 17 | | |
| X213 18 | +28V | |
| X213 19 | | |
| X213 20 | | |
| X213 21 | | |
| X213 22 | +12VSTANDBY (n.c.) | |
| X213 23 | | |
| X213 24 | MB2DIAGNOSE | (17/2C,17/8C) |
| X213 25 | | |
| X213 26 | MB2DEMODIN | (17/8C) |
| X213 27 | | |
| X213 28 | MB2LH2AFGENMON | (17/8C) |
| X213 29 | | |
| X213 30 | MB2ABISSYNCOUT | (17/2D) |
| X213 31 | | |
| X213 32 | MB2OPTOCXO1 | (17/2D) |
| X213 33 | MB2OPTOCXO2 | (17/2D) |
| X213 34 | MB2SOCXO | (17/2D) |
| X213 35 | | |
| X213 36 | MB2RFOCXO | (17/2D) |
| X213 37 | | |
| X213 38 | +3.3V C234 10N | |
| X213 39 | | |
| X213 40 | | |
| X213 41 | | |
| X213 42 | | |
| X213 43 | MB2LH1HANDSETIN | (17/8C) |
| X213 44 | MB2LH1HANDSETOUT | (17/8C) |
| X213 45 | | |
| X213 46 | MB2LH2HANDSETIN | (17/8C) |
| X213 47 | MB2LH2HANDSETOUT | (17/8C) |
| X213 48 | | |
| X213 49 | MB2LH1AFGENMON | (17/8C) |
| X213 50 | | |

| COMPONENT/PIN | SIGNAL | ON SHEET |
|---|---|---|
| **MOTHERBOARD 1/2 CONNECTOR** | | |
| X214 1 | | |
| X214 2 | MB2SC120 | (17/11D) |
| X214 3 | MB2SC110 | (17/11D) |
| X214 4 | MB2SC100 | (17/11D) |
| X214 5 | MB2STD10 | (17/11D) |
| X214 6 | MB2SRD10 | (17/11D) |
| X214 7 | MB2SCK10 | (17/11D) |
| X214 8 | | |
| X214 9 | MB2SC020 | (17/11D) |
| X214 10 | MB2SC010 | (17/11D) |
| X214 11 | MB2SC000 | (17/11C) |
| X214 12 | MB2STD00 | (17/11C) |
| X214 13 | MB2SRD00 | (17/11C) |
| X214 14 | MB2SCK00 | (17/11C) |
| X214 15 | | |
| X214 16 | MB2LH1RES1 | (17/8D) |
| X214 17 | MB2LH1XSPTXRDY | (17/8D) |
| X214 18 | MB2LH1BSPBFI | (17/8D) |
| X214 19 | MB2LH1XSPSP | (17/8D) |
| X214 20 | MB2LH1BSPTXSFM | (17/8D) |
| X214 21 | MB2LH1PRISPTAF | (17/8D) |
| X214 22 | | |
| X214 23 | MB2LH2RES1 | (17/11D) |
| X214 24 | MB2LH2XSPTXRDY | (17/11D) |
| X214 25 | MB2LH2BSPBFI | (17/11D) |
| X214 26 | MB2LH2XSPSP | (17/11D) |
| X214 27 | MB2LH2BSPTXSFM | (17/11D) |
| X214 28 | MB2LH2PRISPTAF | (17/11D) |
| X214 29 | | |
| X214 30 | MB2AUDIOAEN | (17/11C) |
| X214 31 | MB2REFAEN | (17/5C) |
| X214 32 | MB2BSA3 | (17/5B,17/11B) |
| X214 33 | MB2BSA2 | (17/5B,17/11B) |
| X214 34 | MB2BSA1 | (17/5B,17/11B) |
| X214 35 | MB2BSA0 | (17/5B,17/11B) |
| X214 36 | MB2PFCINT | (17/11D) |
| X214 37 | | |
| X214 38 | MB2BSD7 | (17/5C,17/11C) |
| X214 39 | MB2BSD6 | (17/5C,17/11C) |
| X214 40 | MB2BSD5 | (17/5C,17/11C) |
| X214 41 | MB2BSD4 | (17/5C,17/11C) |
| X214 42 | MB2BSD3 | (17/5D,17/11C) |
| X214 43 | MB2BSD2 | (17/5D,17/11C) |
| X214 44 | MB2BSD1 | (17/5D,17/11C) |
| X214 45 | MB2BSD0 | (17/5D,17/11C) |
| X214 46 | MB2BIOW | (17/5D,17/11C) |
| X214 47 | MB2BIOR | (17/5D,17/11C) |
| X214 48 | MB2BRESET | (17/5D,17/11C) |
| X214 49 | MB2AUDIOIRQ | (17/11D) |
| X214 50 | | |

| | | | | | | | |
|---|---|---|---|---|---|---|---|
| ROHDE&SCHWARZ | Benennung: / Designation: MOTHERBOARD-SET | | | | Sprache: / Lang.: DE | Aei / C I 02.02 | Blatt / Sh 16+ |
| Typ. / Type | Datum: / Date: 02-01-25 | Abteilung: / Dpt: 1CMK | Name: / Name: BERNDT | | Zeichn. Nr.: / Drawing No.: 1100.0908.01 S | | |
| 1. Z.: / used in: 1100.0008.01 | | | | TOP/TOP.16 | | | |

# CONNECTOR

| COMPONENT/PIN | SIGNAL | ON SHEET | COMPONENT/PIN | SIGNAL | ON SHEET |
|---|---|---|---|---|---|
| REFERENZ BOARD | | | REFERENZ BOARD | | |
| X101 A1 | C235 10N | | X101 C1 | | |
| X101 A2 | +5.2V | | X101 C2 | | |
| X101 A3 | | | X101 C3 | +5.2V | |
| X101 A4 | +12V | | X101 C4 | | |
| X101 A5 | | | X101 C5 | | |
| X101 A6 | -12V | | X101 C6 | | |
| X101 A7 | | | X101 C7 | | |
| X101 A8 | +8V | | X101 C8 | MB2BSA3 | (16/11D,17/11B) |
| X101 A9 | | | X101 C9 | MB2BSA2 | (16/11D,17/11B) |
| X101 A10 | | | X101 C10 | MB2BSA1 | (16/11D,17/11B) |
| X101 A11 | +28V | | X101 C11 | MB2BSA0 | (16/11D,17/11B) |
| X101 A12 | | | X101 C12 | MB2REFAEN | (16/11C) |
| X101 B1 | | | X101 D1 | | |
| X101 B2 | MB2+5VREF | (16/8B,17/8B) | X101 D2 | MB2BSD7 | (16/11D,17/11C) |
| X101 B3 | | | X101 D3 | MB2BSD6 | (16/11D,17/11C) |
| X101 B4 | R257 100 MB2DIAGNOSE | (16/8C,17/8C) | X101 D4 | MB2BSD5 | (16/11D,17/11C) |
| X101 B5 | | | X101 D5 | MB2BSD4 | (16/11D,17/11C) |
| X101 B6 | MB2ABISSYNCOUT | (16/8C) | X101 D6 | MB2BSD3 | (16/11D,17/11C) |
| X101 B7 | MB2OPTOCXO1 | (16/8D) | X101 D7 | MB2BSD2 | (16/11D,17/11C) |
| X101 B8 | MB2OPTOCXO2 | (16/8D) | X101 D8 | MB2BSD1 | (16/11D,17/11C) |
| X101 B9 | MB2SOCXO | (16/8D) | X101 D9 | MB2BSD0 | (16/11D,17/11C) |
| X101 B10 | | | X101 D10 | MB2BIOW | (16/11D,17/11C) |
| X101 B11 | MB2RFOCXO | (16/8D) | X101 D11 | MB2BIOR | (16/11D,17/11C) |
| X101 B12 | | | X101 D12 | MB2BRESET | (16/11D,17/11C) |

Coding ADR 100..10F

Für diese Unterlage behalten wir uns alle Rechte vor
For this document all rights are reserved

# DEFINITIONS MB2

| COMPONENT/PIN | SIGNAL | ON SHEET | COMPONENT/PIN | SIGNAL | ON SHEET |
|---|---|---|---|---|---|
| AUDIO BOARD | | | AUDIO BOARD | | |
| X111 A1 | | | X111 C1 | | |
| X111 A2 | MB2+5VREF | (16/8B,17/2C) | X111 C2 | | |
| X111 A3 | | | X111 C3 | +5.2V Coding ADR 130..13F | |
| X111 A4 | −12V | | X111 C4 | | |
| X111 A5 | | | X111 C5 | | |
| X111 A6 | +5.2V C236 10N | | X111 C6 | +5.2V | |
| X111 A7 | | | X111 C7 | +5.2V | |
| X111 A8 | | | X111 C8 | MB2BSA0 | (16/11D,17/5B) |
| X111 A9 | +8V | | X111 C9 | MB2BSA1 | (16/11D,17/5B) |
| X111 A10 | | | X111 C10 | MB2BSA2 | (16/11D,17/5B) |
| X111 A11 | +12V | | X111 C11 | MB2BSA3 | (16/11D,17/5B) |
| X111 A12 | | | X111 C12 | MB2AUDIOAEN | (16/11C) |
| X111 A13 | +28V | | X111 C13 | | |
| X111 A14 | | | X111 C14 | MB2BRESET | (16/11D,17/5D) |
| X111 A15 | | | X111 C15 | MB2BIOR | (16/11D,17/5D) |
| X111 A16 | | | X111 C16 | MB2BIOW | (16/11D,17/5D) |
| X111 A17 | MB2LH1HANDSETIN | (16/8D) | X111 C17 | MB2BSD0 | (16/11D,17/5D) |
| X111 A18 | MB2LH1HANDSETOUT | (16/8D) | X111 C18 | MB2BSD1 | (16/11D,17/5D) |
| X111 A19 | | | X111 C19 | MB2BSD2 | (16/11D,17/5D) |
| X111 A20 | MB2LH2HANDSETIN | (16/8D) | X111 C20 | MB2BSD3 | (16/11D,17/5D) |
| X111 A21 | MB2LH2HANDSETOUT | (16/8D) | X111 C21 | MB2BSD4 | (16/11D,17/5C) |
| X111 A22 | | | X111 C22 | MB2BSD5 | (16/11D,17/5C) |
| X111 A23 | MB2LH1AFGENMON | (16/8D) | X111 C23 | MB2BSD6 | (16/11D,17/5C) |
| X111 A24 | MB2LH2AFGENMON | (16/8C) | X111 C24 | MB2BSD7 | (16/11D,17/5C) |
| X111 B1 | | | X111 D1 | | |
| X111 B2 R256 100 | MB2DIAGNOSE | (16/8C,17/2C) | X111 D2 | MB2SCK00 | (16/11C) |
| X111 B3 | | | X111 D3 | MB2SRD00 | (16/11C) |
| X111 B4 | MB2DEMODIN | (16/8C) | X111 D4 | MB2STD00 | (16/11C) |
| X111 B5 | | | X111 D5 | MB2SC000 | (16/11B) |
| X111 B6 | +5.2V | | X111 D6 | MB2SC010 | (16/11B) |
| X111 B7 | | | X111 D7 | MB2SC020 | (16/11B) |
| X111 B8 | | | X111 D8 | | |
| X111 B9 | +3.3V C237 10N | | X111 D9 | MB2SCK10 | (16/11B) |
| X111 B10 | | | X111 D10 | MB2SRD10 | (16/11B) |
| X111 B11 | | | X111 D11 | MB2STD10 | (16/11B) |
| X111 B12 | | | X111 D12 | MB2SC100 | (16/11B) |
| X111 B13 | | | X111 D13 | MB2SC110 | (16/11B) |
| X111 B14 | MB2RESHFCOUNT (n.c.) | | X111 D14 | MB2SC120 | (16/11B) |
| X111 B15 | | | X111 D15 | | |
| X111 B16 | MB2RESAFIN (n.c.) | | X111 D16 | MB2AUDIOIRQ | (16/11D) |
| X111 B17 | | | X111 D17 | MB2PFCINT | (16/11D) |
| X111 B18 | MB2LH1RES1 | (16/11C) | X111 D18 | MB2LH2RES1 | (16/11C) |
| X111 B19 | MB2LH1XSPTXRDY | (16/11C) | X111 D19 | MB2LH2XSPTXRDY | (16/11C) |
| X111 B20 | MB2LH1BSPBFI | (16/11C) | X111 D20 | MB2LH2BSPBFI | (16/11C) |
| X111 B21 | MB2LH1XSPSP | (16/11C) | X111 D21 | MB2LH2XSPSP | (16/11C) |
| X111 B22 | MB2LH1BSPTXSFM | (16/11C) | X111 D22 | MB2LH2BSPTXSFM | (16/11C) |
| X111 B23 | MB2LH1PRISPTAF | (16/11C) | X111 D23 | MB2LH2PRISPTAF | (16/11C) |
| X111 B24 | | | X111 D24 | | |

| | | | | | |
|---|---|---|---|---|---|
| ROHDE&SCHWARZ | Benennung: MOTHERBOARD−SET | | | Sprache: / Lang.: DE | Aei / CI 02.02 | Blatt: / Sh.: 17+ |
| Typ: Type: | Datum: 02−01−25 | Abteilung: Dpt: 1CMK | Name: BERNDT | Zeichn. Nr.: / Drawing No.: 1100.0908.01 S | | |
| 1. Z.: 1100.0008.01 | | | TOP/TOP 17 | | | |

# R PANEL BOARD 1

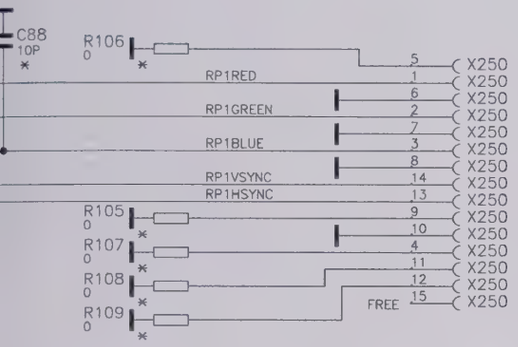


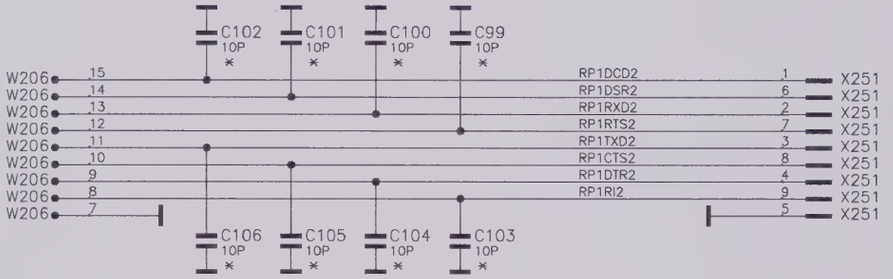


X251 COM2

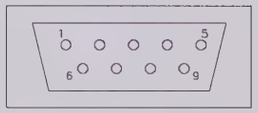


60 MONITOR

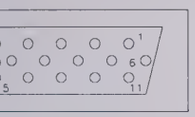


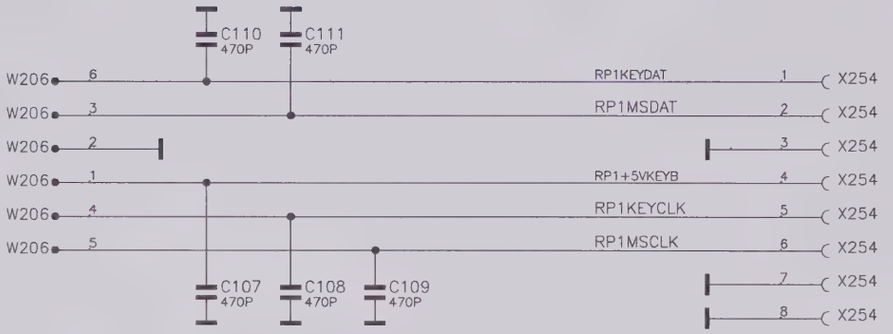


X254

KEYBOARD

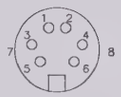


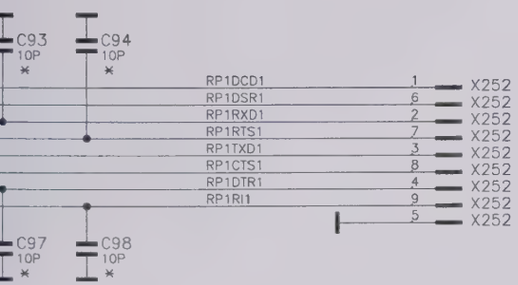


52 COM1

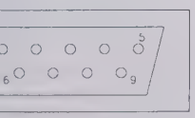


| | | | | | | | |
|---|---|---|---|---|---|---|---|
| ROHDE&SCHWARZ | Benennung: / Designation: MOTHERBOARD–SET | | | | Sprache: / Lang.: DE | Aei: / C.I.: 02.02 | Blatt: / Sh.: 18+ |
| Typ: / Type: | Datum: / Date: 02–01–25 | Abteilung: / Dpt: 1CMK | Name: / Name: BERNDT | | Zeichn. Nr.: / Drawing No.: 1100.0908.01 S | | |
| 1. Z.: / used in: 1100.0008.01 | TOP/TOP.18 | | | | | | |

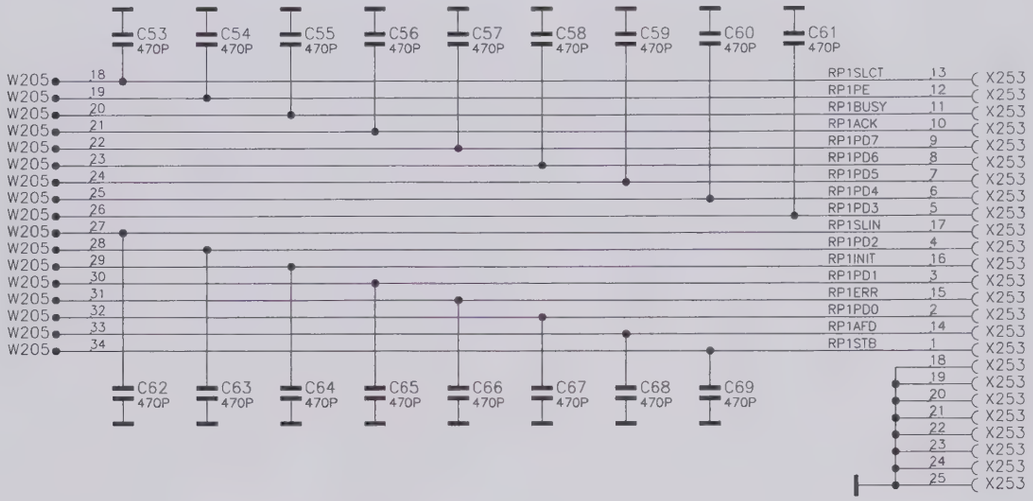


X253 LPT

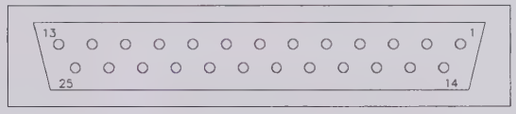


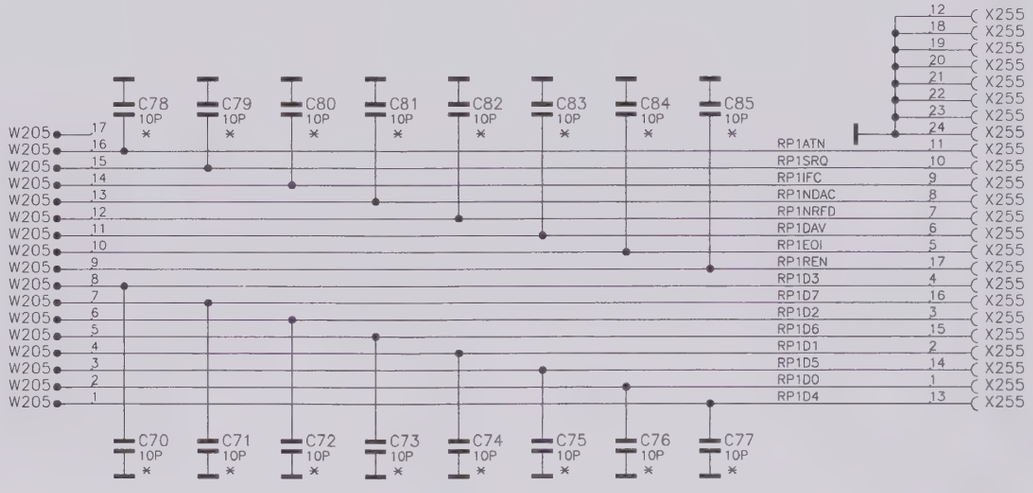


X255 IEC 625 / IEEE 488

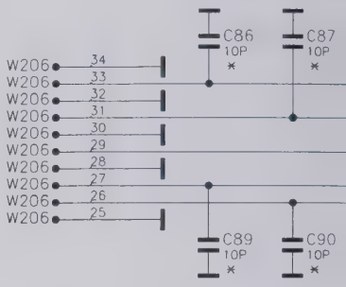


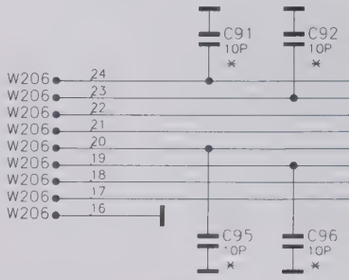


Fuer diese Unterlage behalten wir uns alle Rechte vor
For this document all rights are reserved

# CONNECTOR DEFINITIONS FR

| COMPONENT/PIN | SIGNAL | COMPONENT/PIN |
|---|---|---|

## MOTHERBOARD

W219 1 — FP+5VKEYB — (19/3E)
W219 2
W219 3 — FPLEDRF4IN — H11 2 1
W219 4 — FPLEDRF3OUT — H12 2 1
W219 5 — FPLEDRF2IN — H13 2 1
W219 6 — FPLEDRF2OUT — H14 2 1
W219 7 — FPLEDRF1IN — H15 2 1
W219 8 — FPLEDRF1OUT — H16 2 1
6 X HLMP1719

W219 9 — C134 100P, C135 100P, C136 100P, C137 100P, C138 100P, C139 100P, C140 100P — X303 1
W219 10 — FPFUSEEXTTBUS1 — X303 2
W219 11 — FPFUSEEXTTBUS2 — X303 3
W219 12 — FPFUSEEXTTBUS3 — X303 4
W219 13 — FPFUSEEXTTBUS4 — X303 5
W219 14 — FPFUSEEXTTBUS5 — X303 6
W219 15 — FPFUSEEXTTBUS6 — X303 7
W219 16 — FPFUSEEXTTBUS7 — X303 8
W219 17 — FPFUSEEXTTBUS8 — X303 9
W219 18 — FPFUSEEXTTBUS9 — X303 10
W219 19 — FPFUSEEXTTBUS10 — X303 11
W219 20 — FPFUSEEXTTBUS11 — X303 12
W219 21 — FPFUSEEXTTBUS12 — X303 13
W219 22 — FPFUSEEXTTBUS13 — X303 14
W219 23 — FPFUSEEXTTBUS14 — C141 100P, C142 100P, C143 100P, C144 100P, C145 100P, C146 100P, C147 100P — X303 15

X303 AUX3

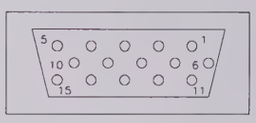


W219 24 — C148 470P, C149 470P, C150 470P, C151 470P, C152 470P — X304 1
W219 25 — FPLH1HANDSETIN — X304 2
W219 26 — FPLH1HANDSETOUT — X304 3
W219 27 — X304 4
W219 28 — FPLH2HANDSETIN — X304 5
W219 29 — FPLH2HANDSETOUT — X304 6
W219 30 — X304 7
(19/2A) — FP+5VKEYB — X304 8
X304 9

X304 SPEECH

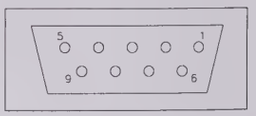


X305 SMB-ST (5 4 3 2)
X306 SMB-ST (5 4 3 2)
X307 SMB-ST (5 4 3 2)
X308 SMB-ST (5 4 3 2)

C112 10P *, C113 10P *, C114 10P *, C115 10P *

Uber diese Unterlage behalten wir uns alle Rechte vor.
For this document all rights are reserved

# ONT PANEL BOARD

| COMPONENT/PIN | SIGNAL | COMPONENT/PIN |
|---|---|---|
| MOTHERBOARD | | |
| W219 31 | FPLH1DCDA | 1 X301 |
| W219 32 | FPLH1DSRA | 6 X301 |
| W219 33 | FPLH1RXDA | 2 X301 |
| W219 34 | FPLH1RTSA | 7 X301 |
| W219 35 | FPLH1TXDA | 3 X301 |
| W219 36 | FPLH1CTSA | 8 X301 |
| W219 37 | FPLH1DTRA | 4 X301 |
| W219 38 | FPLH1RIA | 9 X301 |
| W219 39 | FPLH1GND | 5 X301 |
| W219 40 | FPLH1SERVGND | |
| W219 41 | FPLH2DCDA | 1 X302 |
| W219 42 | FPLH2DSRA | 6 X302 |
| W219 43 | FPLH2RXDA | 2 X302 |
| W219 44 | FPLH2RTSA | 7 X302 |
| W219 45 | FPLH2TXDA | 3 X302 |
| W219 46 | FPLH2CTSA | 8 X302 |
| W219 47 | FPLH2DTRA | 4 X302 |
| W219 48 | FPLH2RIA | 9 X302 |
| W219 49 | FPLH2GND | 5 X302 |
| W219 50 | FPLH2SERVGND | |

C116 470P C117 470P C118 470P C119 470P C120 470P

C121 470P C122 470P C123 470P C124 470P

C125 470P C126 470P C127 470P C128 470P C129 470P

C130 470P C131 470P C132 470P C133 470P

X301 DATA1

X302 DATA2

| | | | | | |
|---|---|---|---|---|---|
| ROHDE&SCHWARZ | Benennung: Designation: MOTHERBOARD-SET | | | Sprache: / Lang.: DE | Aei: / Ci: 02.02 | Blatt / Sh.: 19+ |
| Typ Type | Datum Date 02-01-25 | Abteilung: Dpt 1CMK | Name: Name: BERNDT | Zeichn. Nr.: / Drawing No.. 1100.0908.01 S | | |
| 1. Z.. used in 1100.0008.01 | | | TOP/TOP.19 | | | |

# AR PANEL BOARD 2

| OMPONENT/PIN | SIGNAL | COMPONENT/PIN |
|---|---|---|
| MOTHERBOARD | | |

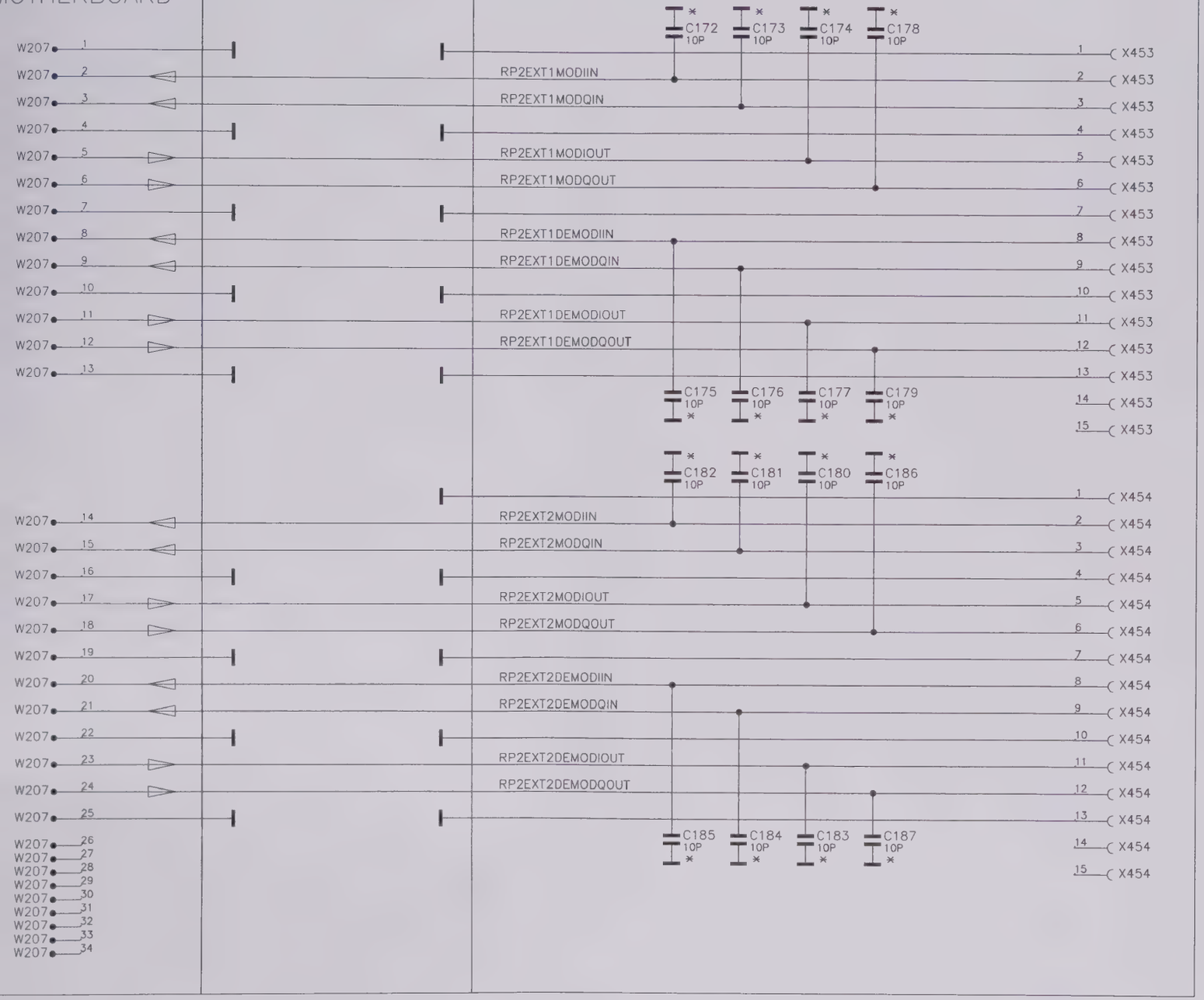


X453 I/Q 1

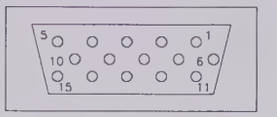


X454 I/Q 2

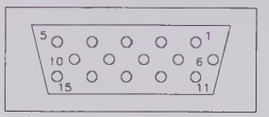


| | | | | | | | |
|---|---|---|---|---|---|---|---|
| ROHDE&SCHWARZ | Benennung: / Designation: MOTHERBOARD–SET | | | | Sprache: / Lang.: DE | Aei: / C.I. 02.02 | Blatt: / Sh.: 20– |
| Typ / Type | Datum: / Date: 02–01–25 | Abteilung / Dpt: 1CMK | Name: / Name: BERNDT | | Zeichn. Nr.: / Drawing No.: 1100.0908.01 S | | |
| 1. Z.: / used in: 1100.0008.01 | | | | TOP/TOP.20 | | | |

# CONNECTOR DEFINITIONS R

| COMPONENT/PIN | SIGNAL | COMPONENT/PIN |
|---|---|---|
| MOTHERBOARD | | |
| W208 1 | | C154 10P * C155 10P * C156 10P * → X451 1 |
| W208 2 | RP2RXTX1SCIRXD | → X451 2 |
| W208 3 | RP2RXTX1SCITXD | → X451 3 |
| W208 4 | | → X451 4 |
| W208 5 | RP2RXTX2SCIRXD | → X451 5 |
| W208 6 | RP2RXTX2SCITXD | → X451 6 |
| W208 7 | | → X451 7 |
| W208 8 | RP2RESERVE8 | → X451 8 |
| W208 9 | RP2RESERVE7 | → X451 9 |
| | | C153 10P * C157 10P * C158 10P * |
| W208 10 | | |
| W208 11 | RP2RESERVE6 (20/3D) | |
| W208 12 | RP2RESERVE5 (20/3D) | |
| W208 13 | RP2RESERVE4 (20/3D) | |
| | | C159 10P * C161 10P * C162 10P * |
| W208 14 | | → X450 1 |
| W208 15 | RP2+5VKEYB | → X450 2 |
| W208 16 | | → X450 3 |
| W208 17 | RP2AUXI2CSDA | → X450 4 |
| W208 18 | RP2AUXI2CSCL | → X450 5 |
| | | → X450 6 |
| | RP2RESERVE4 (20/2C) | → X450 7 |
| | RP2RESERVE5 (20/2C) | → X450 8 |
| | RP2RESERVE6 (20/2C) | → X450 9 |
| | | C160 10P * C163 10P * C164 10P * |
| | | C190 100P C189 100P C188 100P C171 100P C170 100P C169 100P C191 100P |
| W208 19 | | → X452 1 |
| W208 20 | RP2FUSEEXTTBUS1 | → X452 2 |
| W208 21 | RP2FUSEEXTTBUS2 | → X452 3 |
| W208 22 | RP2FUSEEXTTBUS3 | → X452 4 |
| W208 23 | RP2FUSEEXTTBUS4 | → X452 5 |
| W208 24 | RP2FUSEEXTTBUS5 | → X452 6 |
| W208 25 | RP2FUSEEXTTBUS6 | → X452 7 |
| W208 26 | RP2FUSEEXTTBUS7 | → X452 8 |
| W208 27 | RP2FUSEEXTTBUS8 | → X452 9 |
| W208 28 | RP2FUSEEXTTBUS9 | → X452 10 |
| W208 29 | RP2FUSEEXTTBUS10 | → X452 11 |
| W208 30 | RP2FUSEEXTTBUS11 | → X452 12 |
| W208 31 | RP2FUSEEXTTBUS12 | → X452 13 |
| W208 32 | RP2FUSEEXTTBUS13 | → X452 14 |
| W208 33 | RP2FUSEEXTTBUS14 | → X452 15 |
| W208 34 | | |
| | | C197 100P C196 100P C195 100P C194 100P C193 100P C192 100P C198 100P |

X451 SERVICE

X450 AUX

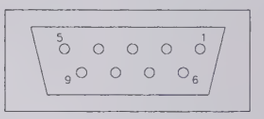


X452 AUX4

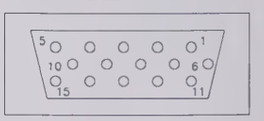


For this document all rights are reserved

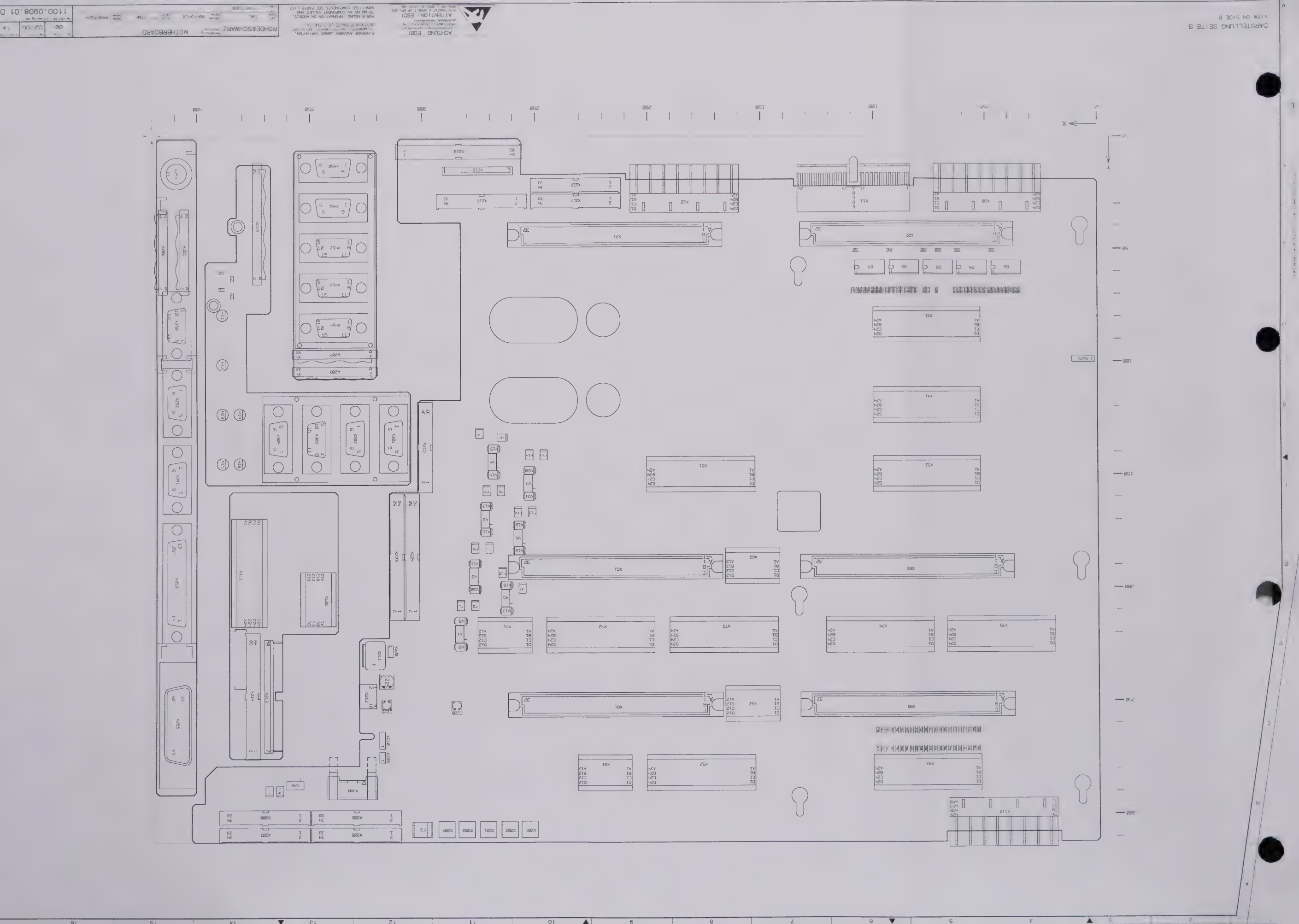
DARSTELLUNG SEITE B
VIEW ON SIDE B
ATTENTION: ESDI
ROHDE&SCHWARZ
MOTHERBOARD
1100.0908.01 D

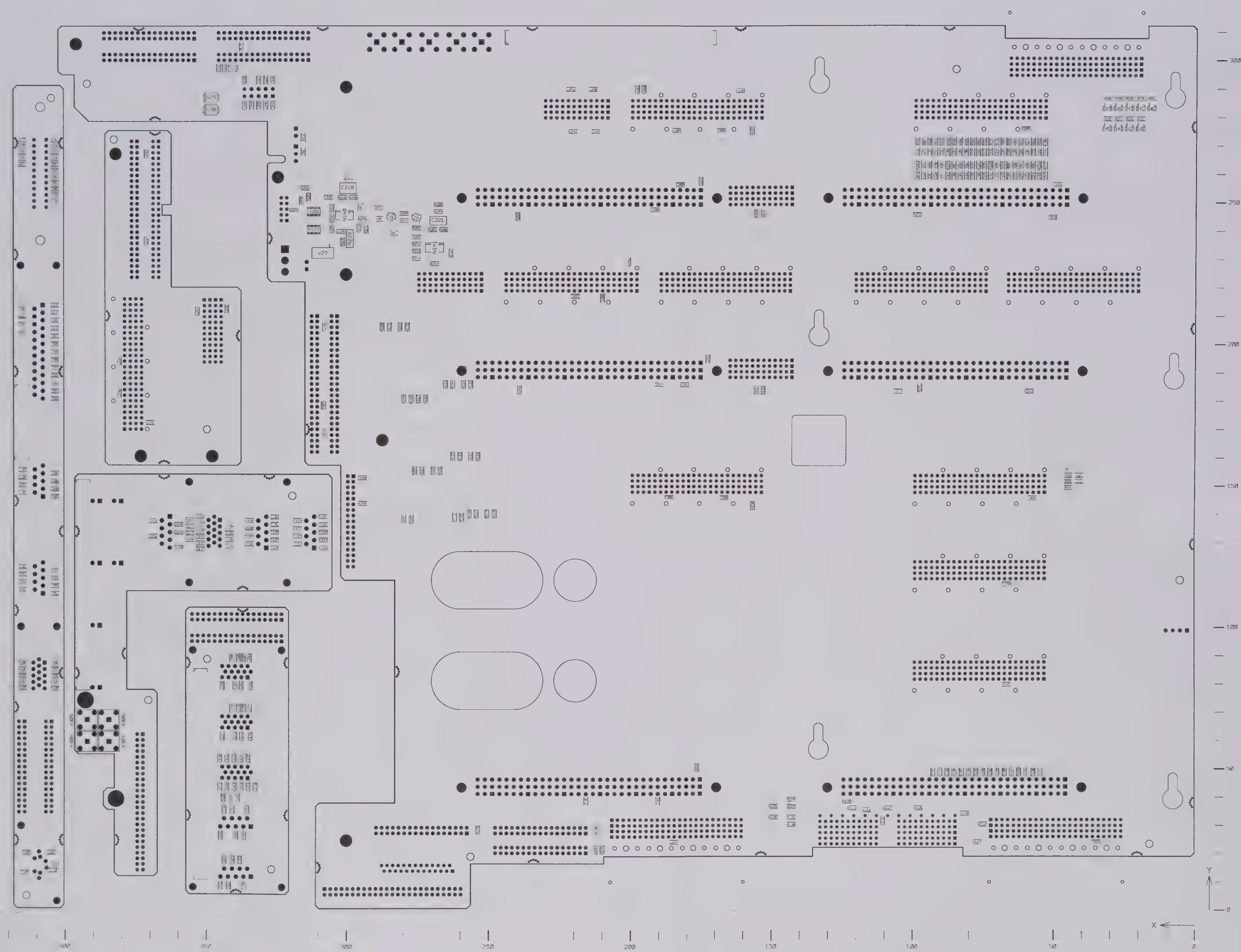


DARSTELLUNG SEITE A
VIEW ON SIDE A

ACHTUNG EGB!

ATTENTION ESD!

BINDENDE ANGABEN UEBER VARIANTEN, TRIMMWERTE, BAUTEILWERTE UND NICHT BESTUECKTE BAUTEILE SIEHE SA

FOR BINDING INFORMATION ON MODELS, TRIMMING AN COMPONENT VALUES AND NONFITTED COMPONENTS SEE PARTS LIST

| | | | |
|---|---|---|---|
| ROHDE&SCHWARZ | Benennung / Designat. | MOTHERBOARD | |
| CMJ | Datum / Date | 99-10-08 | |
| de | 02.00 | 2- | |
| Zeichn.Nr. / Drawing No | 1100.0908.01 D | | |

| el. Kennz. *Part* | Benennung *Designation* | Sachnummer *Stock No.* | Hersteller *Manufacturer* | Bezeichnung *Designation* | enthalten in *contained in* |
|---|---|---|---|---|---|
| | ACHTUNG EGB /ATTENTION ESD<br><br>VARIANTENERKLAERUNG<br>VAR02=GRUNDAUSFUEHRUNG<br>MOD02=BASIC MODEL | | | | |
| C1 | CC 68PF+–1% 50VNP0 0603 SMD–CERAMIC–CAPACITOR | 0009.9746.00 | AVX | 0603 5A***FAT00J | 1100.0908.01 |
| C2 | CC 68PF+–1% 50VNP0 0603 SMD–CERAMIC–CAPACITOR | 0009.9746.00 | AVX | 0603 5A***FAT00J | 1100.0908.01 |
| C3 | CC 68PF+–1% 50VNP0 0603 SMD–CERAMIC–CAPACITOR | 0009.9746.00 | AVX | 0603 5A***FAT00J | 1100.0908.01 |
| C4 | CC 68PF+–1% 50VNP0 0603 SMD–CERAMIC–CAPACITOR | 0009.9746.00 | AVX | 0603 5A***FAT00J | 1100.0908.01 |
| C5 | CC 68PF+–1% 50VNP0 0603 SMD–CERAMIC–CAPACITOR | 0009.9746.00 | AVX | 0603 5A***FAT00J | 1100.0908.01 |
| C6 | CC 68PF+–1% 50VNP0 0603 SMD–CERAMIC–CAPACITOR | 0009.9746.00 | AVX | 0603 5A***FAT00J | 1100.0908.01 |
| C7 | CC 68PF+–1% 50VNP0 0603 SMD–CERAMIC–CAPACITOR | 0009.9746.00 | AVX | 0603 5A***FAT00J | 1100.0908.01 |
| C8 | CC 68PF+–1% 50VNP0 0603 SMD–CERAMIC–CAPACITOR | 0009.9746.00 | AVX | 0603 5A***FAT00J | 1100.0908.01 |
| C9 | CC 68PF+–1% 50VNP0 0603 SMD–CERAMIC–CAPACITOR | 0009.9746.00 | AVX | 0603 5A***FAT00J | 1100.0908.01 |
| C10 | CC 68PF+–1% 50VNP0 0603 SMD–CERAMIC–CAPACITOR | 0009.9746.00 | AVX | 0603 5A***FAT00J | 1100.0908.01 |
| C11 | CC 68PF+–1% 50VNP0 0603 SMD–CERAMIC–CAPACITOR | 0009.9746.00 | AVX | 0603 5A***FAT00J | 1100.0908.01 |
| C12 | CC 68PF+–1% 50VNP0 0603 SMD–CERAMIC–CAPACITOR | 0009.9746.00 | AVX | 0603 5A***FAT00J | 1100.0908.01 |
| C13 | CC 68PF+–1% 50VNP0 0603 SMD–CERAMIC–CAPACITOR | 0009.9746.00 | AVX | 0603 5A***FAT00J | 1100.0908.01 |
| C14 | CC 68PF+–1% 50VNP0 0603 SMD–CERAMIC–CAPACITOR | 0009.9746.00 | AVX | 0603 5A***FAT00J | 1100.0908.01 |
| C15 | CC 68PF+–1% 50VNP0 0603 SMD–CERAMIC–CAPACITOR | 0009.9746.00 | AVX | 0603 5A***FAT00J | 1100.0908.01 |
| C16 | CC 68PF+–1% 50VNP0 0603 SMD–CERAMIC–CAPACITOR | 0009.9746.00 | AVX | 0603 5A***FAT00J | 1100.0908.01 |
| C17 | CC 68PF+–1% 50VNP0 0603 SMD–CERAMIC–CAPACITOR | 0009.9746.00 | AVX | 0603 5A***FAT00J | 1100.0908.01 |
| C18 | CC 68PF+–1% 50VNP0 0603 SMD–CERAMIC–CAPACITOR | 0009.9746.00 | AVX | 0603 5A***FAT00J | 1100.0908.01 |
| C19 | CC 68PF+–1% 50VNP0 0603 SMD–CERAMIC–CAPACITOR | 0009.9746.00 | AVX | 0603 5A***FAT00J | 1100.0908.01 |
| C20 | CC 68PF+–1% 50VNP0 0603 SMD–CERAMIC–CAPACITOR | 0009.9746.00 | AVX | 0603 5A***FAT00J | 1100.0908.01 |
| C21 | CC 68PF+–1% 50VNP0 0603 SMD–CERAMIC–CAPACITOR | 0009.9746.00 | AVX | 0603 5A***FAT00J | 1100.0908.01 |
| C22 | CC 68PF+–1% 50VNP0 0603 SMD–CERAMIC–CAPACITOR | 0009.9746.00 | AVX | 0603 5A***FAT00J | 1100.0908.01 |
| C23 | CC 68PF+–1% 50VNP0 0603 SMD–CERAMIC–CAPACITOR | 0009.9746.00 | AVX | 0603 5A***FAT00J | 1100.0908.01 |
| C24 | CC 68PF+–1% 50VNP0 0603 SMD–CERAMIC–CAPACITOR | 0009.9746.00 | AVX | 0603 5A***FAT00J | 1100.0908.01 |
| C25 | CC 68PF+–1% 50VNP0 0603 SMD–CERAMIC–CAPACITOR | 0009.9746.00 | AVX | 0603 5A***FAT00J | 1100.0908.01 |
| C26 | CC 68PF+–1% 50VNP0 0603 SMD–CERAMIC–CAPACITOR | 0009.9746.00 | AVX | 0603 5A***FAT00J | 1100.0908.01 |
| C27 | CC 68PF+–1% 50VNP0 0603 SMD–CERAMIC–CAPACITOR | 0009.9746.00 | AVX | 0603 5A***FAT00J | 1100.0908.01 |

Für diese Unterlage behalten wir uns alle Rechte vor
*For this document all rights reserved*

| el. Kennz. *Part* | Benennung *Designation* | Sachnummer *Stock No.* | Hersteller *Manufacturer* | Bezeichnung *Designation* | enthalten in *contained in* |
|---|---|---|---|---|---|
| C28 | CC 68PF+–1% 50VNP0 0603 SMD–CERAMIC–CAPACITOR | 0009.9746.00 | AVX | 0603 5A***FAT00J | 1100.0908.01 |
| C29 | CC 68PF+–1% 50VNP0 0603 SMD–CERAMIC–CAPACITOR | 0009.9746.00 | AVX | 0603 5A***FAT00J | 1100.0908.01 |
| C30 | CC 68PF+–1% 50VNP0 0603 SMD–CERAMIC–CAPACITOR | 0009.9746.00 | AVX | 0603 5A***FAT00J | 1100.0908.01 |
| C31 | CC 68PF+–1% 50VNP0 0603 SMD–CERAMIC–CAPACITOR | 0009.9746.00 | AVX | 0603 5A***FAT00J | 1100.0908.01 |
| C32 | CC 68PF+–1% 50VNP0 0603 SMD–CERAMIC–CAPACITOR | 0009.9746.00 | AVX | 0603 5A***FAT00J | 1100.0908.01 |
| C33 | CC 68PF+–1% 50VNP0 0603 SMD–CERAMIC–CAPACITOR | 0009.9746.00 | AVX | 0603 5A***FAT00J | 1100.0908.01 |
| C34 | CC 68PF+–1% 50VNP0 0603 SMD–CERAMIC–CAPACITOR | 0009.9746.00 | AVX | 0603 5A***FAT00J | 1100.0908.01 |
| C35 | CC 68PF+–1% 50VNP0 0603 SMD–CERAMIC–CAPACITOR | 0009.9746.00 | AVX | 0603 5A***FAT00J | 1100.0908.01 |
| C36 | CC 68PF+–1% 50VNP0 0603 SMD–CERAMIC–CAPACITOR | 0009.9746.00 | AVX | 0603 5A***FAT00J | 1100.0908.01 |
| C37 | CC 68PF+–1% 50VNP0 0603 SMD–CERAMIC–CAPACITOR | 0009.9746.00 | AVX | 0603 5A***FAT00J | 1100.0908.01 |
| C38 | CC 68PF+–1% 50VNP0 0603 SMD–CERAMIC–CAPACITOR | 0009.9746.00 | AVX | 0603 5A***FAT00J | 1100.0908.01 |
| C39 | CC 68PF+–1% 50VNP0 0603 SMD–CERAMIC–CAPACITOR | 0009.9746.00 | AVX | 0603 5A***FAT00J | 1100.0908.01 |
| C40 | CC 68PF+–1% 50VNP0 0603 SMD–CERAMIC–CAPACITOR | 0009.9746.00 | AVX | 0603 5A***FAT00J | 1100.0908.01 |
| C41 | CC 68PF+–1% 50VNP0 0603 SMD–CERAMIC–CAPACITOR | 0009.9746.00 | AVX | 0603 5A***FAT00J | 1100.0908.01 |
| C42 | CC 68PF+–1% 50VNP0 0603 SMD–CERAMIC–CAPACITOR | 0009.9746.00 | AVX | 0603 5A***FAT00J | 1100.0908.01 |
| C43 | CC 68PF+–1% 50VNP0 0603 SMD–CERAMIC–CAPACITOR | 0009.9746.00 | AVX | 0603 5A***FAT00J | 1100.0908.01 |
| C44 | CC 68PF+–1% 50VNP0 0603 SMD–CERAMIC–CAPACITOR | 0009.9746.00 | AVX | 0603 5A***FAT00J | 1100.0908.01 |
| C45 | CC 10NF 10% 50V HDK 0603 CERAMIC CAPACITOR | 0009.4844.00 | AVX | 0603 5C *** KAT00J | 1100.0908.01 |
| C46 | CC 10NF 10% 50V HDK 0603 CERAMIC CAPACITOR | 0009.4844.00 | AVX | 0603 5C *** KAT00J | 1100.0908.01 |
| C47 | CC 10NF 10% 50V HDK 0603 CERAMIC CAPACITOR | 0009.4844.00 | AVX | 0603 5C *** KAT00J | 1100.0908.01 |
| C48 | CC 100NF 10% 16V X7R 0603 CERAMIC CAPACITOR | 1097.6292.00 | AVX | 0603YC104KAT | 1100.0908.01 |
| C49 | CC 100NF 10% 16V X7R 0603 CERAMIC CAPACITOR | 1097.6292.00 | AVX | 0603YC104KAT | 1100.0908.01 |
| C50 | CC 100NF 10% 16V X7R 0603 CERAMIC CAPACITOR | 1097.6292.00 | AVX | 0603YC104KAT | 1100.0908.01 |
| C51 | CC 100NF 10% 16V X7R 0603 CERAMIC CAPACITOR | 1097.6292.00 | AVX | 0603YC104KAT | 1100.0908.01 |
| C52 | CC 100NF 10% 16V X7R 0603 CERAMIC CAPACITOR | 1097.6292.00 | AVX | 0603YC104KAT | 1100.0908.01 |
| C53 | CC 470P 1% 50V NP0 0603 CERAMIC CAPACITOR | 0048.6680.00 | KEMET | C0603C471F5GAC | 1100.0908.01 |
| C54 | CC 470P 1% 50V NP0 0603 CERAMIC CAPACITOR | 0048.6680.00 | KEMET | C0603C471F5GAC | 1100.0908.01 |
| C55 | CC 470P 1% 50V NP0 0603 CERAMIC CAPACITOR | 0048.6680.00 | KEMET | C0603C471F5GAC | 1100.0908.01 |
| C56 | CC 470P 1% 50V NP0 0603 CERAMIC CAPACITOR | 0048.6680.00 | KEMET | C0603C471F5GAC | 1100.0908.01 |
| C57 | CC 470P 1% 50V NP0 0603 | 0048.6680.00 | KEMET | C0603C471F5GAC | 1100.0908.01 |

| el. Kennz. *Part* | Benennung *Designation* | Sachnummer *Stock No.* | Hersteller *Manufacturer* | Bezeichnung *Designation* | enthalten in *contained in* |
|---|---|---|---|---|---|
| | CERAMIC CAPACITOR | | | | |
| C58 | CC 470P 1% 50V NP0 0603 CERAMIC CAPACITOR | 0048.6680.00 | KEMET | C0603C471F5GAC | 1100.0908.01 |
| C59 | CC 470P 1% 50V NP0 0603 CERAMIC CAPACITOR | 0048.6680.00 | KEMET | C0603C471F5GAC | 1100.0908.01 |
| C60 | CC 470P 1% 50V NP0 0603 CERAMIC CAPACITOR | 0048.6680.00 | KEMET | C0603C471F5GAC | 1100.0908.01 |
| C61 | CC 470P 1% 50V NP0 0603 CERAMIC CAPACITOR | 0048.6680.00 | KEMET | C0603C471F5GAC | 1100.0908.01 |
| C62 | CC 470P 1% 50V NP0 0603 CERAMIC CAPACITOR | 0048.6680.00 | KEMET | C0603C471F5GAC | 1100.0908.01 |
| C63 | CC 470P 1% 50V NP0 0603 CERAMIC CAPACITOR | 0048.6680.00 | KEMET | C0603C471F5GAC | 1100.0908.01 |
| C64 | CC 470P 1% 50V NP0 0603 CERAMIC CAPACITOR | 0048.6680.00 | KEMET | C0603C471F5GAC | 1100.0908.01 |
| C65 | CC 470P 1% 50V NP0 0603 CERAMIC CAPACITOR | 0048.6680.00 | KEMET | C0603C471F5GAC | 1100.0908.01 |
| C66 | CC 470P 1% 50V NP0 0603 CERAMIC CAPACITOR | 0048.6680.00 | KEMET | C0603C471F5GAC | 1100.0908.01 |
| C67 | CC 470P 1% 50V NP0 0603 CERAMIC CAPACITOR | 0048.6680.00 | KEMET | C0603C471F5GAC | 1100.0908.01 |
| C68 | CC 470P 1% 50V NP0 0603 CERAMIC CAPACITOR | 0048.6680.00 | KEMET | C0603C471F5GAC | 1100.0908.01 |
| C69 | CC 470P 1% 50V NP0 0603 CERAMIC CAPACITOR | 0048.6680.00 | KEMET | C0603C471F5GAC | 1100.0908.01 |
| C70 | CC 10P+–0.1PF50V NP0 0603 SMD–CERAMIC–CAPACITOR NICHT BESTUECKT | 0009.4567.00 | AVX | 0603 5A *** FAT00J | 1100.0908.01 |
| C71 | CC 10P+–0.1PF50V NP0 0603 SMD–CERAMIC–CAPACITOR NICHT BESTUECKT | 0009.4567.00 | AVX | 0603 5A *** FAT00J | 1100.0908.01 |
| C72 | CC 10P+–0.1PF50V NP0 0603 SMD–CERAMIC–CAPACITOR NICHT BESTUECKT | 0009.4567.00 | AVX | 0603 5A *** FAT00J | 1100.0908.01 |
| C73 | CC 10P+–0.1PF50V NP0 0603 SMD–CERAMIC–CAPACITOR NICHT BESTUECKT | 0009.4567.00 | AVX | 0603 5A *** FAT00J | 1100.0908.01 |
| C74 | CC 10P+–0.1PF50V NP0 0603 SMD–CERAMIC–CAPACITOR NICHT BESTUECKT | 0009.4567.00 | AVX | 0603 5A *** FAT00J | 1100.0908.01 |
| C75 | CC 10P+–0.1PF50V NP0 0603 SMD–CERAMIC–CAPACITOR NICHT BESTUECKT | 0009.4567.00 | AVX | 0603 5A *** FAT00J | 1100.0908.01 |
| C76 | CC 10P+–0.1PF50V NP0 0603 SMD–CERAMIC–CAPACITOR NICHT BESTUECKT | 0009.4567.00 | AVX | 0603 5A *** FAT00J | 1100.0908.01 |
| C77 | CC 10P+–0.1PF50V NP0 0603 SMD–CERAMIC–CAPACITOR NICHT BESTUECKT | 0009.4567.00 | AVX | 0603 5A *** FAT00J | 1100.0908.01 |
| C78 | CC 10P+–0.1PF50V NP0 0603 SMD–CERAMIC–CAPACITOR NICHT BESTUECKT | 0009.4567.00 | AVX | 0603 5A *** FAT00J | 1100.0908.01 |
| C79 | CC 10P+–0.1PF50V NP0 0603 SMD–CERAMIC–CAPACITOR NICHT BESTUECKT | 0009.4567.00 | AVX | 0603 5A *** FAT00J | 1100.0908.01 |
| C80 | CC 10P+–0.1PF50V NP0 0603 SMD–CERAMIC–CAPACITOR NICHT BESTUECKT | 0009.4567.00 | AVX | 0603 5A *** FAT00J | 1100.0908.01 |
| C81 | CC 10P+–0.1PF50V NP0 0603 SMD–CERAMIC–CAPACITOR NICHT BESTUECKT | 0009.4567.00 | AVX | 0603 5A *** FAT00J | 1100.0908.01 |
| C82 | CC 10P+–0.1PF50V NP0 0603 SMD–CERAMIC–CAPACITOR | 0009.4567.00 | AVX | 0603 5A *** FAT00J | 1100.0908.01 |




Für diese Unterlage behalten wir uns alle Rechte vor
*For this document all rights reserved*

| el. Kennz. *Part* | Benennung *Designation* | Sachnummer *Stock No.* | Hersteller *Manufacturer* | Bezeichnung *Designation* | enthalten in *contained in* |
|---|---|---|---|---|---|
| | NICHT BESTUECKT | | | | |
| C83 | CC 10P+–0.1PF50V NP0 0603 SMD–CERAMIC–CAPACITOR NICHT BESTUECKT | 0009.4567.00 | AVX | 0603 5A *** FAT00J | 1100.0908.01 |
| C84 | CC 10P+–0.1PF50V NP0 0603 SMD–CERAMIC–CAPACITOR NICHT BESTUECKT | 0009.4567.00 | AVX | 0603 5A *** FAT00J | 1100.0908.01 |
| C85 | CC 10P+–0.1PF50V NP0 0603 SMD–CERAMIC–CAPACITOR NICHT BESTUECKT | 0009.4567.00 | AVX | 0603 5A *** FAT00J | 1100.0908.01 |
| C86 | CC 10P+–0.1PF50V NP0 0603 SMD–CERAMIC–CAPACITOR NICHT BESTUECKT | 0009.4567.00 | AVX | 0603 5A *** FAT00J | 1100.0908.01 |
| C87 | CC 10P+–0.1PF50V NP0 0603 SMD–CERAMIC–CAPACITOR NICHT BESTUECKT | 0009.4567.00 | AVX | 0603 5A *** FAT00J | 1100.0908.01 |
| C88 | CC 10P+–0.1PF50V NP0 0603 SMD–CERAMIC–CAPACITOR NICHT BESTUECKT | 0009.4567.00 | AVX | 0603 5A *** FAT00J | 1100.0908.01 |
| C89 | CC 10P+–0.1PF50V NP0 0603 SMD–CERAMIC–CAPACITOR NICHT BESTUECKT | 0009.4567.00 | AVX | 0603 5A *** FAT00J | 1100.0908.01 |
| C90 | CC 10P+–0.1PF50V NP0 0603 SMD–CERAMIC–CAPACITOR NICHT BESTUECKT | 0009.4567.00 | AVX | 0603 5A *** FAT00J | 1100.0908.01 |
| C91 | CC 10P+–0.1PF50V NP0 0603 SMD–CERAMIC–CAPACITOR NICHT BESTUECKT | 0009.4567.00 | AVX | 0603 5A *** FAT00J | 1100.0908.01 |
| C92 | CC 10P+–0.1PF50V NP0 0603 SMD–CERAMIC–CAPACITOR NICHT BESTUECKT | 0009.4567.00 | AVX | 0603 5A *** FAT00J | 1100.0908.01 |
| C93 | CC 10P+–0.1PF50V NP0 0603 SMD–CERAMIC–CAPACITOR NICHT BESTUECKT | 0009.4567.00 | AVX | 0603 5A *** FAT00J | 1100.0908.01 |
| C94 | CC 10P+–0.1PF50V NP0 0603 SMD–CERAMIC–CAPACITOR NICHT BESTUECKT | 0009.4567.00 | AVX | 0603 5A *** FAT00J | 1100.0908.01 |
| C95 | CC 10P+–0.1PF50V NP0 0603 SMD–CERAMIC–CAPACITOR NICHT BESTUECKT | 0009.4567.00 | AVX | 0603 5A *** FAT00J | 1100.0908.01 |
| C96 | CC 10P+–0.1PF50V NP0 0603 SMD–CERAMIC–CAPACITOR NICHT BESTUECKT | 0009.4567.00 | AVX | 0603 5A *** FAT00J | 1100.0908.01 |
| C97 | CC 10P+–0.1PF50V NP0 0603 SMD–CERAMIC–CAPACITOR NICHT BESTUECKT | 0009.4567.00 | AVX | 0603 5A *** FAT00J | 1100.0908.01 |
| C98 | CC 10P+–0.1PF50V NP0 0603 SMD–CERAMIC–CAPACITOR NICHT BESTUECKT | 0009.4567.00 | AVX | 0603 5A *** FAT00J | 1100.0908.01 |
| C99 | CC 10P+–0.1PF50V NP0 0603 SMD–CERAMIC–CAPACITOR NICHT BESTUECKT | 0009.4567.00 | AVX | 0603 5A *** FAT00J | 1100.0908.01 |
| C100 | CC 10P+–0.1PF50V NP0 0603 SMD–CERAMIC–CAPACITOR NICHT BESTUECKT | 0009.4567.00 | AVX | 0603 5A *** FAT00J | 1100.0908.01 |
| C101 | CC 10P+–0.1PF50V NP0 0603 SMD–CERAMIC–CAPACITOR NICHT BESTUECKT | 0009.4567.00 | AVX | 0603 5A *** FAT00J | 1100.0908.01 |
| C102 | CC 10P+–0.1PF50V NP0 0603 SMD–CERAMIC–CAPACITOR NICHT BESTUECKT | 0009.4567.00 | AVX | 0603 5A *** FAT00J | 1100.0908.01 |
| C103 | CC 10P+–0.1PF50V NP0 0603 SMD–CERAMIC–CAPACITOR NICHT BESTUECKT | 0009.4567.00 | AVX | 0603 5A *** FAT00J | 1100.0908.01 |
| C104 | CC 10P+–0.1PF50V NP0 0603 SMD–CERAMIC–CAPACITOR | 0009.4567.00 | AVX | 0603 5A *** FAT00J | 1100.0908.01 |

| el. Kennz. *Part* | Benennung *Designation* | Sachnummer *Stock No.* | Hersteller *Manufacturer* | Bezeichnung *Designation* | enthalten in *contained in* |
|---|---|---|---|---|---|
| | NICHT BESTUECKT | | | | |
| C105 | CC 10P+–0.1PF50V NP0 0603 SMD–CERAMIC–CAPACITOR NICHT BESTUECKT | 0009.4567.00 | AVX | 0603 5A *** FAT00J | 1100.0908.01 |
| C106 | CC 10P+–0.1PF50V NP0 0603 SMD–CERAMIC–CAPACITOR NICHT BESTUECKT | 0009.4567.00 | AVX | 0603 5A *** FAT00J | 1100.0908.01 |
| C107 | CC 470P 1% 50V NP0 0603 CERAMIC CAPACITOR | 0048.6680.00 | KEMET | C0603C471F5GAC | 1100.0908.01 |
| C108 | CC 470P 1% 50V NP0 0603 CERAMIC CAPACITOR | 0048.6680.00 | KEMET | C0603C471F5GAC | 1100.0908.01 |
| C109 | CC 470P 1% 50V NP0 0603 CERAMIC CAPACITOR | 0048.6680.00 | KEMET | C0603C471F5GAC | 1100.0908.01 |
| C110 | CC 470P 1% 50V NP0 0603 CERAMIC CAPACITOR | 0048.6680.00 | KEMET | C0603C471F5GAC | 1100.0908.01 |
| C111 | CC 470P 1% 50V NP0 0603 CERAMIC CAPACITOR | 0048.6680.00 | KEMET | C0603C471F5GAC | 1100.0908.01 |
| C112 | CC 10P+–0.1PF50V NP0 0603 SMD–CERAMIC–CAPACITOR NICHT BESTUECKT | 0009.4567.00 | AVX | 0603 5A *** FAT00J | 1100.0908.01 |
| C113 | CC 10P+–0.1PF50V NP0 0603 SMD–CERAMIC–CAPACITOR NICHT BESTUECKT | 0009.4567.00 | AVX | 0603 5A *** FAT00J | 1100.0908.01 |
| C114 | CC 10P+–0.1PF50V NP0 0603 SMD–CERAMIC–CAPACITOR NICHT BESTUECKT | 0009.4567.00 | AVX | 0603 5A *** FAT00J | 1100.0908.01 |
| C115 | CC 10P+–0.1PF50V NP0 0603 SMD–CERAMIC–CAPACITOR NICHT BESTUECKT | 0009.4567.00 | AVX | 0603 5A *** FAT00J | 1100.0908.01 |
| C116 | CC 470P 1% 50V NP0 0603 CERAMIC CAPACITOR | 0048.6680.00 | KEMET | C0603C471F5GAC | 1100.0908.01 |
| C117 | CC 470P 1% 50V NP0 0603 CERAMIC CAPACITOR | 0048.6680.00 | KEMET | C0603C471F5GAC | 1100.0908.01 |
| C118 | CC 470P 1% 50V NP0 0603 CERAMIC CAPACITOR | 0048.6680.00 | KEMET | C0603C471F5GAC | 1100.0908.01 |
| C119 | CC 470P 1% 50V NP0 0603 CERAMIC CAPACITOR | 0048.6680.00 | KEMET | C0603C471F5GAC | 1100.0908.01 |
| C120 | CC 470P 1% 50V NP0 0603 CERAMIC CAPACITOR | 0048.6680.00 | KEMET | C0603C471F5GAC | 1100.0908.01 |
| C121 | CC 470P 1% 50V NP0 0603 CERAMIC CAPACITOR | 0048.6680.00 | KEMET | C0603C471F5GAC | 1100.0908.01 |
| C122 | CC 470P 1% 50V NP0 0603 CERAMIC CAPACITOR | 0048.6680.00 | KEMET | C0603C471F5GAC | 1100.0908.01 |
| C123 | CC 470P 1% 50V NP0 0603 CERAMIC CAPACITOR | 0048.6680.00 | KEMET | C0603C471F5GAC | 1100.0908.01 |
| C124 | CC 470P 1% 50V NP0 0603 CERAMIC CAPACITOR | 0048.6680.00 | KEMET | C0603C471F5GAC | 1100.0908.01 |
| C125 | CC 470P 1% 50V NP0 0603 CERAMIC CAPACITOR | 0048.6680.00 | KEMET | C0603C471F5GAC | 1100.0908.01 |
| C126 | CC 470P 1% 50V NP0 0603 CERAMIC CAPACITOR | 0048.6680.00 | KEMET | C0603C471F5GAC | 1100.0908.01 |
| C127 | CC 470P 1% 50V NP0 0603 CERAMIC CAPACITOR | 0048.6680.00 | KEMET | C0603C471F5GAC | 1100.0908.01 |
| C128 | CC 470P 1% 50V NP0 0603 CERAMIC CAPACITOR | 0048.6680.00 | KEMET | C0603C471F5GAC | 1100.0908.01 |
| C129 | CC 470P 1% 50V NP0 0603 CERAMIC CAPACITOR | 0048.6680.00 | KEMET | C0603C471F5GAC | 1100.0908.01 |
| C130 | CC 470P 1% 50V NP0 0603 CERAMIC CAPACITOR | 0048.6680.00 | KEMET | C0603C471F5GAC | 1100.0908.01 |
| C131 | CC 470P 1% 50V NP0 0603 CERAMIC CAPACITOR | 0048.6680.00 | KEMET | C0603C471F5GAC | 1100.0908.01 |




Für diese Unterlage behalten wir uns alle Rechte vor
*For this document all rights reserved*

| el. Kennz. *Part* | Benennung *Designation* | Sachnummer *Stock No.* | Hersteller *Manufacturer* | Bezeichnung *Designation* | enthalten in *contained in* |
|---|---|---|---|---|---|
| C132 | CC 470P 1% 50V NP0 0603 CERAMIC CAPACITOR | 0048.6680.00 | KEMET | C0603C471F5GAC | 1100.0908.01 |
| C133 | CC 470P 1% 50V NP0 0603 CERAMIC CAPACITOR | 0048.6680.00 | KEMET | C0603C471F5GAC | 1100.0908.01 |
| C134 | CC 100PF+–1% 50VNP0 0603 SMD–CERAMIC–CAPACITOR | 0009.4680.00 | AVX | 0603 5A***FAT00J | 1100.0908.01 |
| C135 | CC 100PF+–1% 50VNP0 0603 SMD–CERAMIC–CAPACITOR | 0009.4680.00 | AVX | 0603 5A***FAT00J | 1100.0908.01 |
| C136 | CC 100PF+–1% 50VNP0 0603 SMD–CERAMIC–CAPACITOR | 0009.4680.00 | AVX | 0603 5A***FAT00J | 1100.0908.01 |
| C137 | CC 100PF+–1% 50VNP0 0603 SMD–CERAMIC–CAPACITOR | 0009.4680.00 | AVX | 0603 5A***FAT00J | 1100.0908.01 |
| C138 | CC 100PF+–1% 50VNP0 0603 SMD–CERAMIC–CAPACITOR | 0009.4680.00 | AVX | 0603 5A***FAT00J | 1100.0908.01 |
| C139 | CC 100PF+–1% 50VNP0 0603 SMD–CERAMIC–CAPACITOR | 0009.4680.00 | AVX | 0603 5A***FAT00J | 1100.0908.01 |
| C140 | CC 100PF+–1% 50VNP0 0603 SMD–CERAMIC–CAPACITOR | 0009.4680.00 | AVX | 0603 5A***FAT00J | 1100.0908.01 |
| C141 | CC 100PF+–1% 50VNP0 0603 SMD–CERAMIC–CAPACITOR | 0009.4680.00 | AVX | 0603 5A***FAT00J | 1100.0908.01 |
| C142 | CC 100PF+–1% 50VNP0 0603 SMD–CERAMIC–CAPACITOR | 0009.4680.00 | AVX | 0603 5A***FAT00J | 1100.0908.01 |
| C143 | CC 100PF+–1% 50VNP0 0603 SMD–CERAMIC–CAPACITOR | 0009.4680.00 | AVX | 0603 5A***FAT00J | 1100.0908.01 |
| C144 | CC 100PF+–1% 50VNP0 0603 SMD–CERAMIC–CAPACITOR | 0009.4680.00 | AVX | 0603 5A***FAT00J | 1100.0908.01 |
| C145 | CC 100PF+–1% 50VNP0 0603 SMD–CERAMIC–CAPACITOR | 0009.4680.00 | AVX | 0603 5A***FAT00J | 1100.0908.01 |
| C146 | CC 100PF+–1% 50VNP0 0603 SMD–CERAMIC–CAPACITOR | 0009.4680.00 | AVX | 0603 5A***FAT00J | 1100.0908.01 |
| C147 | CC 100PF+–1% 50VNP0 0603 SMD–CERAMIC–CAPACITOR | 0009.4680.00 | AVX | 0603 5A***FAT00J | 1100.0908.01 |
| C148 | CC 470P 1% 50V NP0 0603 CERAMIC CAPACITOR | 0048.6680.00 | KEMET | C0603C471F5GAC | 1100.0908.01 |
| C149 | CC 470P 1% 50V NP0 0603 CERAMIC CAPACITOR | 0048.6680.00 | KEMET | C0603C471F5GAC | 1100.0908.01 |
| C150 | CC 470P 1% 50V NP0 0603 CERAMIC CAPACITOR | 0048.6680.00 | KEMET | C0603C471F5GAC | 1100.0908.01 |
| C151 | CC 470P 1% 50V NP0 0603 CERAMIC CAPACITOR | 0048.6680.00 | KEMET | C0603C471F5GAC | 1100.0908.01 |
| C152 | CC 470P 1% 50V NP0 0603 CERAMIC CAPACITOR | 0048.6680.00 | KEMET | C0603C471F5GAC | 1100.0908.01 |
| C153 | CC 10P+–0.1PF50V NP0 0603 SMD–CERAMIC–CAPACITOR NICHT BESTUECKT | 0009.4567.00 | AVX | 0603 5A *** FAT00J | 1100.0908.01 |
| C154 | CC 10P+–0.1PF50V NP0 0603 SMD–CERAMIC–CAPACITOR NICHT BESTUECKT | 0009.4567.00 | AVX | 0603 5A *** FAT00J | 1100.0908.01 |
| C155 | CC 10P+–0.1PF50V NP0 0603 SMD–CERAMIC–CAPACITOR NICHT BESTUECKT | 0009.4567.00 | AVX | 0603 5A *** FAT00J | 1100.0908.01 |
| C156 | CC 10P+–0.1PF50V NP0 0603 SMD–CERAMIC–CAPACITOR NICHT BESTUECKT | 0009.4567.00 | AVX | 0603 5A *** FAT00J | 1100.0908.01 |
| C157 | CC 10P+–0.1PF50V NP0 0603 SMD–CERAMIC–CAPACITOR NICHT BESTUECKT | 0009.4567.00 | AVX | 0603 5A *** FAT00J | 1100.0908.01 |
| C158 | CC 10P+–0.1PF50V NP0 0603 SMD–CERAMIC–CAPACITOR NICHT BESTUECKT | 0009.4567.00 | AVX | 0603 5A *** FAT00J | 1100.0908.01 |

| el. Kennz. *Part* | Benennung *Designation* | Sachnummer *Stock No.* | Hersteller *Manufacturer* | Bezeichnung *Designation* | enthalten in *contained in* |
|---|---|---|---|---|---|
| C159 | CC 10P+–0.1PF50V NP0 0603 SMD–CERAMIC–CAPACITOR NICHT BESTUECKT | 0009.4567.00 | AVX | 0603 5A *** FAT00J | 1100.0908.01 |
| C160 | CC 10P+–0.1PF50V NP0 0603 SMD–CERAMIC–CAPACITOR NICHT BESTUECKT | 0009.4567.00 | AVX | 0603 5A *** FAT00J | 1100.0908.01 |
| C161 | CC 10P+–0.1PF50V NP0 0603 SMD–CERAMIC–CAPACITOR NICHT BESTUECKT | 0009.4567.00 | AVX | 0603 5A *** FAT00J | 1100.0908.01 |
| C162 | CC 10P+–0.1PF50V NP0 0603 SMD–CERAMIC–CAPACITOR NICHT BESTUECKT | 0009.4567.00 | AVX | 0603 5A *** FAT00J | 1100.0908.01 |
| C163 | CC 10P+–0.1PF50V NP0 0603 SMD–CERAMIC–CAPACITOR NICHT BESTUECKT | 0009.4567.00 | AVX | 0603 5A *** FAT00J | 1100.0908.01 |
| C164 | CC 10P+–0.1PF50V NP0 0603 SMD–CERAMIC–CAPACITOR NICHT BESTUECKT | 0009.4567.00 | AVX | 0603 5A *** FAT00J | 1100.0908.01 |
| C165 | CC 10P+–0.1PF50V NP0 0603 SMD–CERAMIC–CAPACITOR NICHT BESTUECKT | 0009.4567.00 | AVX | 0603 5A *** FAT00J | 1100.0908.01 |
| C166 | CC 10P+–0.1PF50V NP0 0603 SMD–CERAMIC–CAPACITOR NICHT BESTUECKT | 0009.4567.00 | AVX | 0603 5A *** FAT00J | 1100.0908.01 |
| C167 | CC 10P+–0.1PF50V NP0 0603 SMD–CERAMIC–CAPACITOR NICHT BESTUECKT | 0009.4567.00 | AVX | 0603 5A *** FAT00J | 1100.0908.01 |
| C168 | CC 10P+–0.1PF50V NP0 0603 SMD–CERAMIC–CAPACITOR NICHT BESTUECKT | 0009.4567.00 | AVX | 0603 5A *** FAT00J | 1100.0908.01 |
| C169 | CC 100PF+–1% 50VNP0 0603 SMD–CERAMIC–CAPACITOR | 0009.4680.00 | AVX | 0603 5A***FAT00J | 1100.0908.01 |
| C170 | CC 100PF+–1% 50VNP0 0603 SMD–CERAMIC–CAPACITOR | 0009.4680.00 | AVX | 0603 5A***FAT00J | 1100.0908.01 |
| C171 | CC 100PF+–1% 50VNP0 0603 SMD–CERAMIC–CAPACITOR | 0009.4680.00 | AVX | 0603 5A***FAT00J | 1100.0908.01 |
| C172 | CC 10P+–0.1PF50V NP0 0603 SMD–CERAMIC–CAPACITOR NICHT BESTUECKT | 0009.4567.00 | AVX | 0603 5A *** FAT00J | 1100.0908.01 |
| C173 | CC 10P+–0.1PF50V NP0 0603 SMD–CERAMIC–CAPACITOR NICHT BESTUECKT | 0009.4567.00 | AVX | 0603 5A *** FAT00J | 1100.0908.01 |
| C174 | CC 10P+–0.1PF50V NP0 0603 SMD–CERAMIC–CAPACITOR NICHT BESTUECKT | 0009.4567.00 | AVX | 0603 5A *** FAT00J | 1100.0908.01 |
| C175 | CC 10P+–0.1PF50V NP0 0603 SMD–CERAMIC–CAPACITOR NICHT BESTUECKT | 0009.4567.00 | AVX | 0603 5A *** FAT00J | 1100.0908.01 |
| C176 | CC 10P+–0.1PF50V NP0 0603 SMD–CERAMIC–CAPACITOR NICHT BESTUECKT | 0009.4567.00 | AVX | 0603 5A *** FAT00J | 1100.0908.01 |
| C177 | CC 10P+–0.1PF50V NP0 0603 SMD–CERAMIC–CAPACITOR NICHT BESTUECKT | 0009.4567.00 | AVX | 0603 5A *** FAT00J | 1100.0908.01 |
| C178 | CC 10P+–0.1PF50V NP0 0603 SMD–CERAMIC–CAPACITOR NICHT BESTUECKT | 0009.4567.00 | AVX | 0603 5A *** FAT00J | 1100.0908.01 |
| C179 | CC 10P+–0.1PF50V NP0 0603 SMD–CERAMIC–CAPACITOR NICHT BESTUECKT | 0009.4567.00 | AVX | 0603 5A *** FAT00J | 1100.0908.01 |
| C180 | CC 10P+–0.1PF50V NP0 0603 SMD–CERAMIC–CAPACITOR NICHT BESTUECKT | 0009.4567.00 | AVX | 0603 5A *** FAT00J | 1100.0908.01 |
| C181 | CC 10P+–0.1PF50V NP0 0603 SMD–CERAMIC–CAPACITOR NICHT BESTUECKT | 0009.4567.00 | AVX | 0603 5A *** FAT00J | 1100.0908.01 |

Für diese Unterlage behalten wir uns alle Rechte vor
*For this document all rights reserved*

| el. Kennz. *Part* | Benennung *Designation* | Sachnummer *Stock No.* | Hersteller *Manufacturer* | Bezeichnung *Designation* | enthalten in *contained in* |
|---|---|---|---|---|---|
| C182 | CC 10P+–0.1PF50V NP0 0603 SMD–CERAMIC–CAPACITOR NICHT BESTUECKT | 0009.4567.00 | AVX | 0603 5A *** FAT00J | 1100.0908.01 |
| C183 | CC 10P+–0.1PF50V NP0 0603 SMD–CERAMIC–CAPACITOR NICHT BESTUECKT | 0009.4567.00 | AVX | 0603 5A *** FAT00J | 1100.0908.01 |
| C184 | CC 10P+–0.1PF50V NP0 0603 SMD–CERAMIC–CAPACITOR NICHT BESTUECKT | 0009.4567.00 | AVX | 0603 5A *** FAT00J | 1100.0908.01 |
| C185 | CC 10P+–0.1PF50V NP0 0603 SMD–CERAMIC–CAPACITOR NICHT BESTUECKT | 0009.4567.00 | AVX | 0603 5A *** FAT00J | 1100.0908.01 |
| C186 | CC 10P+–0.1PF50V NP0 0603 SMD–CERAMIC–CAPACITOR NICHT BESTUECKT | 0009.4567.00 | AVX | 0603 5A *** FAT00J | 1100.0908.01 |
| C187 | CC 10P+–0.1PF50V NP0 0603 SMD–CERAMIC–CAPACITOR NICHT BESTUECKT | 0009.4567.00 | AVX | 0603 5A *** FAT00J | 1100.0908.01 |
| C188 | CC 100PF+–1% 50VNP0 0603 SMD–CERAMIC–CAPACITOR | 0009.4680.00 | AVX | 0603 5A***FAT00J | 1100.0908.01 |
| C189 | CC 100PF+–1% 50VNP0 0603 SMD–CERAMIC–CAPACITOR | 0009.4680.00 | AVX | 0603 5A***FAT00J | 1100.0908.01 |
| C190 | CC 100PF+–1% 50VNP0 0603 SMD–CERAMIC–CAPACITOR | 0009.4680.00 | AVX | 0603 5A***FAT00J | 1100.0908.01 |
| C191 | CC 100PF+–1% 50VNP0 0603 SMD–CERAMIC–CAPACITOR | 0009.4680.00 | AVX | 0603 5A***FAT00J | 1100.0908.01 |
| C192 | CC 100PF+–1% 50VNP0 0603 SMD–CERAMIC–CAPACITOR | 0009.4680.00 | AVX | 0603 5A***FAT00J | 1100.0908.01 |
| C193 | CC 100PF+–1% 50VNP0 0603 SMD–CERAMIC–CAPACITOR | 0009.4680.00 | AVX | 0603 5A***FAT00J | 1100.0908.01 |
| C194 | CC 100PF+–1% 50VNP0 0603 SMD–CERAMIC–CAPACITOR | 0009.4680.00 | AVX | 0603 5A***FAT00J | 1100.0908.01 |
| C195 | CC 100PF+–1% 50VNP0 0603 SMD–CERAMIC–CAPACITOR | 0009.4680.00 | AVX | 0603 5A***FAT00J | 1100.0908.01 |
| C196 | CC 100PF+–1% 50VNP0 0603 SMD–CERAMIC–CAPACITOR | 0009.4680.00 | AVX | 0603 5A***FAT00J | 1100.0908.01 |
| C197 | CC 100PF+–1% 50VNP0 0603 SMD–CERAMIC–CAPACITOR | 0009.4680.00 | AVX | 0603 5A***FAT00J | 1100.0908.01 |
| C198 | CC 100PF+–1% 50VNP0 0603 SMD–CERAMIC–CAPACITOR | 0009.4680.00 | AVX | 0603 5A***FAT00J | 1100.0908.01 |
| C199 | CC 10NF 10% 50V HDK 0603 CERAMIC CAPACITOR | 0009.4844.00 | AVX | 0603 5C *** KAT00J | 1100.0908.01 |
| C200 | CC 10NF 10% 50V HDK 0603 CERAMIC CAPACITOR | 0009.4844.00 | AVX | 0603 5C *** KAT00J | 1100.0908.01 |
| C201 | CC 10NF 10% 50V HDK 0603 CERAMIC CAPACITOR | 0009.4844.00 | AVX | 0603 5C *** KAT00J | 1100.0908.01 |
| C202 | CC 10NF 10% 50V HDK 0603 CERAMIC CAPACITOR | 0009.4844.00 | AVX | 0603 5C *** KAT00J | 1100.0908.01 |
| C203 | CC 10NF 10% 50V HDK 0603 CERAMIC CAPACITOR | 0009.4844.00 | AVX | 0603 5C *** KAT00J | 1100.0908.01 |
| C204 | CC 10NF 10% 50V HDK 0603 CERAMIC CAPACITOR | 0009.4844.00 | AVX | 0603 5C *** KAT00J | 1100.0908.01 |
| C205 | CC 10NF 10% 50V HDK 0603 CERAMIC CAPACITOR | 0009.4844.00 | AVX | 0603 5C *** KAT00J | 1100.0908.01 |
| C206 | CC 10NF 10% 50V HDK 0603 CERAMIC CAPACITOR | 0009.4844.00 | AVX | 0603 5C *** KAT00J | 1100.0908.01 |
| C207 | CC 10NF 10% 50V HDK 0603 CERAMIC CAPACITOR | 0009.4844.00 | AVX | 0603 5C *** KAT00J | 1100.0908.01 |
| C208 | CC 10NF 10% 50V HDK 0603 CERAMIC CAPACITOR | 0009.4844.00 | AVX | 0603 5C *** KAT00J | 1100.0908.01 |

| el. Kennz. *Part* | Benennung *Designation* | Sachnummer *Stock No.* | Hersteller *Manufacturer* | Bezeichnung *Designation* | enthalten in *contained in* |
|---|---|---|---|---|---|
| C209 | CC 10NF 10% 50V HDK 0603 CERAMIC CAPACITOR | 0009.4844.00 | AVX | 0603 5C *** KAT00J | 1100.0908.01 |
| C210 | CC 10NF 10% 50V HDK 0603 CERAMIC CAPACITOR | 0009.4844.00 | AVX | 0603 5C *** KAT00J | 1100.0908.01 |
| C211 | CC 10NF 10% 50V HDK 0603 CERAMIC CAPACITOR | 0009.4844.00 | AVX | 0603 5C *** KAT00J | 1100.0908.01 |
| C212 | CC 10NF 10% 50V HDK 0603 CERAMIC CAPACITOR | 0009.4844.00 | AVX | 0603 5C *** KAT00J | 1100.0908.01 |
| C213 | CC 10NF 10% 50V HDK 0603 CERAMIC CAPACITOR | 0009.4844.00 | AVX | 0603 5C *** KAT00J | 1100.0908.01 |
| C214 | CC 10NF 10% 50V HDK 0603 CERAMIC CAPACITOR | 0009.4844.00 | AVX | 0603 5C *** KAT00J | 1100.0908.01 |
| C215 | CC 10NF 10% 50V HDK 0603 CERAMIC CAPACITOR | 0009.4844.00 | AVX | 0603 5C *** KAT00J | 1100.0908.01 |
| C216 | CC 10NF 10% 50V HDK 0603 CERAMIC CAPACITOR | 0009.4844.00 | AVX | 0603 5C *** KAT00J | 1100.0908.01 |
| C217 | CC 10NF 10% 50V HDK 0603 CERAMIC CAPACITOR NICHT BESTUECKT | 0009.4844.00 | AVX | 0603 5C *** KAT00J | 1100.0908.01 |
| C218 | CC 470NF+–10%50V X7R 1812 CERAMIC CHIP CAPACITOR | 0007.7498.00 | AVX | 1812 5C 474K(J)AT1A | 1100.0908.01 |
| C219 | CE 10UF+–20%16V RUND SMD SMD ELECTROLYTIC CAPACIT. | 0010.7914.00 | PANASONIC | EEV–HB1C100R | 1100.0908.01 |
| C220 | CE 10UF+–20%16V 7X 4X 8 ELECTROLYTIC CAPACITOR | 0022.8085.00 | KEMET | T340 B106MO16 AS | 1100.0908.01 |
| C221 | CC 150NF+–10%50V X7R 1210 CERAMIC CHIP CAPACITOR NICHT BESTUECKT | 0007.7446.00 | AVX | 1210 5C 154KAT00F | 1100.0908.01 |
| C222 | CC 100NF 10% 16V X7R 0603 CERAMIC CAPACITOR NICHT BESTUECKT | 1097.6292.00 | AVX | 0603YC104KAT | 1100.0908.01 |
| C223 | CC 100NF 10% 16V X7R 0603 CERAMIC CAPACITOR NICHT BESTUECKT | 1097.6292.00 | AVX | 0603YC104KAT | 1100.0908.01 |
| C224 | CC 470P 1% 50V NP0 0603 CERAMIC CAPACITOR | 0048.6680.00 | KEMET | C0603C471F5GAC | 1100.0908.01 |
| C225 | CE 100UF+–20%16V RUND SMD SMD–ELECTOLYTIC CAPACIT. | 0009.6553.00 | SANYO DENK | 16CV100GA | 1100.0908.01 |
| C226 | CC 10NF 10% 50V HDK 0603 CERAMIC CAPACITOR NICHT BESTUECKT | 0009.4844.00 | AVX | 0603 5C *** KAT00J | 1100.0908.01 |
| C227 | CC 10NF 10% 50V HDK 0603 CERAMIC CAPACITOR NICHT BESTUECKT | 0009.4844.00 | AVX | 0603 5C *** KAT00J | 1100.0908.01 |
| C228 | CC 10NF 10% 50V HDK 0603 CERAMIC CAPACITOR | 0009.4844.00 | AVX | 0603 5C *** KAT00J | 1100.0908.01 |
| C229 | CC 10NF 10% 50V HDK 0603 CERAMIC CAPACITOR | 0009.4844.00 | AVX | 0603 5C *** KAT00J | 1100.0908.01 |
| C230 | CC 10NF 10% 50V HDK 0603 CERAMIC CAPACITOR | 0009.4844.00 | AVX | 0603 5C *** KAT00J | 1100.0908.01 |
| C231 | CC 10NF 10% 50V HDK 0603 CERAMIC CAPACITOR | 0009.4844.00 | AVX | 0603 5C *** KAT00J | 1100.0908.01 |
| C232 | CC 10NF 10% 50V HDK 0603 CERAMIC CAPACITOR | 0009.4844.00 | AVX | 0603 5C *** KAT00J | 1100.0908.01 |
| C233 | CC 10NF 10% 50V HDK 0603 CERAMIC CAPACITOR | 0009.4844.00 | AVX | 0603 5C *** KAT00J | 1100.0908.01 |
| C234 | CC 10NF 10% 50V HDK 0603 CERAMIC CAPACITOR | 0009.4844.00 | AVX | 0603 5C *** KAT00J | 1100.0908.01 |
| C235 | CC 10NF 10% 50V HDK 0603 CERAMIC CAPACITOR | 0009.4844.00 | AVX | 0603 5C *** KAT00J | 1100.0908.01 |
| C236 | CC 10NF 10% 50V HDK 0603 | 0009.4844.00 | AVX | 0603 5C *** KAT00J | 1100.0908.01 |




Für diese Unterlage behalten wir uns alle Rechte vor
For this document all rights reserved

| el. Kennz. *Part* | Benennung *Designation* | Sachnummer *Stock No.* | Hersteller *Manufacturer* | Bezeichnung *Designation* | enthalten in *contained in* |
|---|---|---|---|---|---|
| | CERAMIC CAPACITOR | | | | |
| C237 | CC 10NF 10% 50V HDK 0603 CERAMIC CAPACITOR | 0009.4844.00 | AVX | 0603 5C *** KAT00J | 1100.0908.01 |
| C238 | CC 10NF 10% 50V HDK 0603 CERAMIC CAPACITOR | 0009.4844.00 | AVX | 0603 5C *** KAT00J | 1100.0908.01 |
| C239 | CC 10NF 10% 50V HDK 0603 CERAMIC CAPACITOR | 0009.4844.00 | AVX | 0603 5C *** KAT00J | 1100.0908.01 |
| C240 | CC 10NF 10% 50V HDK 0603 CERAMIC CAPACITOR | 0009.4844.00 | AVX | 0603 5C *** KAT00J | 1100.0908.01 |
| C241 | CC 10NF 10% 50V HDK 0603 CERAMIC CAPACITOR | 0009.4844.00 | AVX | 0603 5C *** KAT00J | 1100.0908.01 |
| C242 | CC 10NF 10% 50V HDK 0603 CERAMIC CAPACITOR | 0009.4844.00 | AVX | 0603 5C *** KAT00J | 1100.0908.01 |
| C243 | CC 10P+–0.1PF50V NP0 0603 SMD–CERAMIC–CAPACITOR | 0009.4567.00 | AVX | 0603 5A *** FAT00J | 1100.0908.01 |
| C244 | CC 10P+–0.1PF50V NP0 0603 SMD–CERAMIC–CAPACITOR NICHT BESTUECKT | 0009.4567.00 | AVX | 0603 5A *** FAT00J | 1100.0908.01 |
| C245 | CC 10P+–0.1PF50V NP0 0603 SMD–CERAMIC–CAPACITOR NICHT BESTUECKT | 0009.4567.00 | AVX | 0603 5A *** FAT00J | 1100.0908.01 |
| C246 | CC 10P+–0.1PF50V NP0 0603 SMD–CERAMIC–CAPACITOR NICHT BESTUECKT | 0009.4567.00 | AVX | 0603 5A *** FAT00J | 1100.0908.01 |
| C247 | CC 68PF+–1% 50VNP0 0603 SMD–CERAMIC–CAPACITOR | 0009.9746.00 | AVX | 0603 5A***FAT00J | 1100.0908.01 |
| C248 | CC 68PF+–1% 50VNP0 0603 SMD–CERAMIC–CAPACITOR | 0009.9746.00 | AVX | 0603 5A***FAT00J | 1100.0908.01 |
| D4 | BL 74HCT245D 8XTRANSC OCTAL BUS TRANSCEIVER | 0007.5414.00 | PHILIPS SE | (PC)74HCT245(D/T) | 1100.0908.01 |
| D5 | BL 74HCT245D 8XTRANSC OCTAL BUS TRANSCEIVER | 0007.5414.00 | PHILIPS SE | (PC)74HCT245(D/T) | 1100.0908.01 |
| D6 | BL 74HCT245D 8XTRANSC OCTAL BUS TRANSCEIVER | 0007.5414.00 | PHILIPS SE | (PC)74HCT245(D/T) | 1100.0908.01 |
| D7 | BL 74HCT245D 8XTRANSC OCTAL BUS TRANSCEIVER | 0007.5414.00 | PHILIPS SE | (PC)74HCT245(D/T) | 1100.0908.01 |
| D8 | BL 74HCT245D 8XTRANSC OCTAL BUS TRANSCEIVER | 0007.5414.00 | PHILIPS SE | (PC)74HCT245(D/T) | 1100.0908.01 |
| F1 | RK 0.2A FUSE PTC 0.8W SMD RESETTABLE FUSE | 2080.6990.00 | BOURNS INC | MF–MSMD020–2 | 1100.0908.01 |
| F2 | RK 0.2A FUSE PTC 0.8W SMD RESETTABLE FUSE | 2080.6990.00 | BOURNS INC | MF–MSMD020–2 | 1100.0908.01 |
| F3 | RK 1.5A FUSE PTC 15V SMD RESETTABLE FUSE | 1081.0290.00 | BOURNS INC | MF–SM–150–2 | 1100.0908.01 |
| F4 | RK 0.2A FUSE PTC 0.8W SMD RESETTABLE FUSE | 2080.6990.00 | BOURNS INC | MF–MSMD020–2 | 1100.0908.01 |
| F5 | RK 0.2A FUSE PTC 0.8W SMD RESETTABLE FUSE | 2080.6990.00 | BOURNS INC | MF–MSMD020–2 | 1100.0908.01 |
| F6 | RK 0.2A FUSE PTC 0.8W SMD RESETTABLE FUSE | 2080.6990.00 | BOURNS INC | MF–MSMD020–2 | 1100.0908.01 |
| F7 | RK 0.2A FUSE PTC 0.8W SMD RESETTABLE FUSE | 2080.6990.00 | BOURNS INC | MF–MSMD020–2 | 1100.0908.01 |
| F8 | RK 0.2A FUSE PTC 0.8W SMD RESETTABLE FUSE | 2080.6990.00 | BOURNS INC | MF–MSMD020–2 | 1100.0908.01 |
| F9 | RK 0.2A FUSE PTC 0.8W SMD RESETTABLE FUSE | 2080.6990.00 | BOURNS INC | MF–MSMD020–2 | 1100.0908.01 |
| F10 | RK 0.2A FUSE PTC 0.8W SMD RESETTABLE FUSE | 2080.6990.00 | BOURNS INC | MF–MSMD020–2 | 1100.0908.01 |
| F11 | RK 0.2A FUSE PTC 0.8W SMD RESETTABLE FUSE | 2080.6990.00 | BOURNS INC | MF–MSMD020–2 | 1100.0908.01 |

| el. Kennz. *Part* | Benennung *Designation* | Sachnummer *Stock No.* | Hersteller *Manufacturer* | Bezeichnung *Designation* | enthalten in *contained in* |
|---|---|---|---|---|---|
| F12 | RK 0.2A FUSE PTC 0.8W SMD RESETTABLE FUSE | 2080.6990.00 | BOURNS INC | MF–MSMD020–2 | 1100.0908.01 |
| F13 | RK 0.2A FUSE PTC 0.8W SMD RESETTABLE FUSE | 2080.6990.00 | BOURNS INC | MF–MSMD020–2 | 1100.0908.01 |
| F14 | RK 0.2A FUSE PTC 0.8W SMD RESETTABLE FUSE | 2080.6990.00 | BOURNS INC | MF–MSMD020–2 | 1100.0908.01 |
| F15 | RK 0.2A FUSE PTC 0.8W SMD RESETTABLE FUSE | 2080.6990.00 | BOURNS INC | MF–MSMD020–2 | 1100.0908.01 |
| F16 | RK 0.2A FUSE PTC 0.8W SMD RESETTABLE FUSE | 2080.6990.00 | BOURNS INC | MF–MSMD020–2 | 1100.0908.01 |
| F17 | RK 0.2A FUSE PTC 0.8W SMD RESETTABLE FUSE | 2080.6990.00 | BOURNS INC | MF–MSMD020–2 | 1100.0908.01 |
| H1 | AF LGS269–BO GRUEN LED GREEN LED | 0009.8362.00 | | | 1100.0908.01 |
| H2 | AF LGS269–BO GRUEN LED GREEN LED | 0009.8362.00 | | | 1100.0908.01 |
| H3 | AF LGS269–BO GRUEN LED GREEN LED | 0009.8362.00 | | | 1100.0908.01 |
| H4 | AF LGS269–BO GRUEN LED GREEN LED | 0009.8362.00 | | | 1100.0908.01 |
| H5 | AF LGS269–BO GRUEN LED GREEN LED | 0009.8362.00 | | | 1100.0908.01 |
| H6 | AF LGS269–BO GRUEN LED GREEN LED | 0009.8362.00 | | | 1100.0908.01 |
| H7 | AF LGS269–BO GRUEN LED GREEN LED | 0009.8362.00 | | | 1100.0908.01 |
| H8 | AF LGS269–BO GRUEN LED GREEN LED | 0009.8362.00 | | | 1100.0908.01 |
| H9 | AF LGS269–BO GRUEN LED GREEN LED | 0009.8362.00 | | | 1100.0908.01 |
| H11 | AF HLMP1719 LED3 GELB YELLOW LED | 0099.9140.00 | FAIRCHILD | HLMP–1719 L31S | 1100.0908.01 |
| H12 | AF HLMP1719 LED3 GELB YELLOW LED | 0099.9140.00 | FAIRCHILD | HLMP–1719 L31S | 1100.0908.01 |
| H13 | AF HLMP1719 LED3 GELB YELLOW LED | 0099.9140.00 | FAIRCHILD | HLMP–1719 L31S | 1100.0908.01 |
| H14 | AF HLMP1719 LED3 GELB YELLOW LED | 0099.9140.00 | FAIRCHILD | HLMP–1719 L31S | 1100.0908.01 |
| H15 | AF HLMP1719 LED3 GELB YELLOW LED | 0099.9140.00 | FAIRCHILD | HLMP–1719 L31S | 1100.0908.01 |
| H16 | AF HLMP1719 LED3 GELB YELLOW LED | 0099.9140.00 | FAIRCHILD | HLMP–1719 L31S | 1100.0908.01 |
| N140 | BO LM2904D 2X VF OPAMP VOLTAGE FEEDBACK OPAMP | 6024.4010.00 | PHILIPS SE | LM2904D | 1100.0908.01 |
| N141 | BO LM2904D 2X VF OPAMP VOLTAGE FEEDBACK OPAMP NICHT BESTUECKT | 6024.4010.00 | PHILIPS SE | LM2904D | 1100.0908.01 |
| R1 | RG 10K +–1% TK100 0603 SMD RESISTOR EIA0603 | 0009.5357.00 | DALE | CRCW 0603 | 1100.0908.01 |
| R2 | RG 10K +–1% TK100 0603 SMD RESISTOR EIA0603 | 0009.5357.00 | DALE | CRCW 0603 | 1100.0908.01 |
| R3 | RG 10K +–1% TK100 0603 SMD RESISTOR EIA0603 | 0009.5357.00 | DALE | CRCW 0603 | 1100.0908.01 |
| R4 | RG 10K +–1% TK100 0603 SMD RESISTOR EIA0603 | 0009.5357.00 | DALE | CRCW 0603 | 1100.0908.01 |
| R5 | RG 10K +–1% TK100 0603 SMD RESISTOR EIA0603 | 0009.5357.00 | DALE | CRCW 0603 | 1100.0908.01 |
| R6 | RG 10K +–1% TK100 0603 SMD RESISTOR EIA0603 | 0009.5357.00 | DALE | CRCW 0603 | 1100.0908.01 |




Für diese Unterlage behalten wir uns alle Rechte vor.
*For this document all rights reserved*

| el. Kennz. *Part* | Benennung *Designation* | Sachnummer *Stock No.* | Hersteller *Manufacturer* | Bezeichnung *Designation* | enthalten in *contained in* |
|---|---|---|---|---|---|
| R7 | RG 10K +–1% TK100 0603 SMD RESISTOR EIA0603 | 0009.5357.00 | DALE | CRCW 0603 | 1100.0908.01 |
| R8 | RG 33K +–1% TK100 0603 SMD RESISTOR EIA0603 | 0009.7066.00 | DALE | CRCW 0603 | 1100.0908.01 |
| R9 | RG 10K +–1% TK100 0603 SMD RESISTOR EIA0603 | 0009.5357.00 | DALE | CRCW 0603 | 1100.0908.01 |
| R10 | RG 10K +–1% TK100 0603 SMD RESISTOR EIA0603 | 0009.5357.00 | DALE | CRCW 0603 | 1100.0908.01 |
| R11 | RG 10K +–1% TK100 0603 SMD RESISTOR EIA0603 | 0009.5357.00 | DALE | CRCW 0603 | 1100.0908.01 |
| R12 | RG 75K +–1% TK100 0603 SMD RESISTOR EIA0603 NICHT BESTUECKT | 2074.8937.00 | DALE | CRCW 0603 | 1100.0908.01 |
| R13 | RG 10K +–1% TK100 0603 SMD RESISTOR EIA0603 | 0009.5357.00 | DALE | CRCW 0603 | 1100.0908.01 |
| R14 | RG 10K +–1% TK100 0603 SMD RESISTOR EIA0603 | 0009.5357.00 | DALE | CRCW 0603 | 1100.0908.01 |
| R15 | RG 10K +–1% TK100 0603 SMD RESISTOR EIA0603 NICHT BESTUECKT | 0009.5357.00 | DALE | CRCW 0603 | 1100.0908.01 |
| R16 | RG 10K +–1% TK100 0603 SMD RESISTOR EIA0603 NICHT BESTUECKT | 0009.5357.00 | DALE | CRCW 0603 | 1100.0908.01 |
| R17 | RG 10K +–1% TK100 0603 SMD RESISTOR EIA0603 NICHT BESTUECKT | 0009.5357.00 | DALE | CRCW 0603 | 1100.0908.01 |
| R18 | RG 10K +–1% TK100 0603 SMD RESISTOR EIA0603 NICHT BESTUECKT | 0009.5357.00 | DALE | CRCW 0603 | 1100.0908.01 |
| R19 | RG 10K +–1% TK100 0603 SMD RESISTOR EIA0603 NICHT BESTUECKT | 0009.5357.00 | DALE | CRCW 0603 | 1100.0908.01 |
| R20 | RG 2K74 +–1% TK100 0603 SMD RESISTOR EIA0603 | 0010.8410.00 | DALE | CRCW 0603 | 1100.0908.01 |
| R21 | RG 13K +–1% TK100 0603 SMD RESISTOR EIA0603 | 1097.6428.00 | DALE | CRCW 0603 | 1100.0908.01 |
| R22 | RG 61R9 +–1%TK100 0603 SMD RESISTOR EIA0603 | 0048.4841.00 | DALE | CRCW 0603 | 1100.0908.01 |
| R23 | RG 61R9 +–1%TK100 0603 SMD RESISTOR EIA0603 | 0048.4841.00 | DALE | CRCW 0603 | 1100.0908.01 |
| R24 | RG 61R9 +–1%TK100 0603 SMD RESISTOR EIA0603 | 0048.4841.00 | DALE | CRCW 0603 | 1100.0908.01 |
| R25 | RG 1K82 +–1% TK100 0603 SMD RESISTOR EIA0603 | 0010.8404.00 | DALE | CRCW 0603 | 1100.0908.01 |
| R26 | RG 2K0 +–1% TK100 0603 SMD RESISTOR EIA0603 | 1097.6328.00 | DALE | CRCW 0603 | 1100.0908.01 |
| R27 | RG 4K7 +–1% TK100 0603 SMD RESISTOR EIA0603 | 0009.7020.00 | DALE | CRCW 0603 | 1100.0908.01 |
| R28 | RG 4K7 +–1% TK100 0603 SMD RESISTOR EIA0603 | 0009.7020.00 | DALE | CRCW 0603 | 1100.0908.01 |
| R29 | RG 4K7 +–1% TK100 0603 SMD RESISTOR EIA0603 | 0009.7020.00 | DALE | CRCW 0603 | 1100.0908.01 |
| R30 | RG 4K7 +–1% TK100 0603 SMD RESISTOR EIA0603 | 0009.7020.00 | DALE | CRCW 0603 | 1100.0908.01 |
| R31 | RG 680R +–1% TK100 0603 SMD RESISTOR EIA0603 | 0009.6982.00 | DALE | CRCW 0603 | 1100.0908.01 |
| R32 | RG 10K +–1% TK100 0603 SMD RESISTOR EIA0603 | 0009.5357.00 | DALE | CRCW 0603 | 1100.0908.01 |
| R33 | RG 10K +–1% TK100 0603 SMD RESISTOR EIA0603 | 0009.5357.00 | DALE | CRCW 0603 | 1100.0908.01 |




...of this document all rights reserved

| el. Kennz. *Part* | Benennung *Designation* | Sachnummer *Stock No.* | Hersteller *Manufacturer* | Bezeichnung *Designation* | enthalten in *contained in* |
|---|---|---|---|---|---|
| R34 | RG 10K +–1% TK100 0603 SMD RESISTOR EIA0603 | 0009.5357.00 | DALE | CRCW 0603 | 1100.0908.01 |
| R35 | RG 10K +–1% TK100 0603 SMD RESISTOR EIA0603 | 0009.5357.00 | DALE | CRCW 0603 | 1100.0908.01 |
| R36 | RG 10K +–1% TK100 0603 SMD RESISTOR EIA0603 | 0009.5357.00 | DALE | CRCW 0603 | 1100.0908.01 |
| R37 | RG 10K +–1% TK100 0603 SMD RESISTOR EIA0603 | 0009.5357.00 | DALE | CRCW 0603 | 1100.0908.01 |
| R38 | RG 10K +–1% TK100 0603 SMD RESISTOR EIA0603 | 0009.5357.00 | DALE | CRCW 0603 | 1100.0908.01 |
| R39 | RG 10K +–1% TK100 0603 SMD RESISTOR EIA0603 | 0009.5357.00 | DALE | CRCW 0603 | 1100.0908.01 |
| R40 | RG 10K +–1% TK100 0603 SMD RESISTOR EIA0603 | 0009.5357.00 | DALE | CRCW 0603 | 1100.0908.01 |
| R41 | RG 10K +–1% TK100 0603 SMD RESISTOR EIA0603 | 0009.5357.00 | DALE | CRCW 0603 | 1100.0908.01 |
| R42 | RG 10K +–1% TK100 0603 SMD RESISTOR EIA0603 | 0009.5357.00 | DALE | CRCW 0603 | 1100.0908.01 |
| R43 | RG 10K +–1% TK100 0603 SMD RESISTOR EIA0603 | 0009.5357.00 | DALE | CRCW 0603 | 1100.0908.01 |
| R44 | RG 10K +–1% TK100 0603 SMD RESISTOR EIA0603 | 0009.5357.00 | DALE | CRCW 0603 | 1100.0908.01 |
| R45 | RG 10K +–1% TK100 0603 SMD RESISTOR EIA0603 | 0009.5357.00 | DALE | CRCW 0603 | 1100.0908.01 |
| R46 | RG 10K +–1% TK100 0603 SMD RESISTOR EIA0603 | 0009.5357.00 | DALE | CRCW 0603 | 1100.0908.01 |
| R47 | RG 10K +–1% TK100 0603 SMD RESISTOR EIA0603 | 0009.5357.00 | DALE | CRCW 0603 | 1100.0908.01 |
| R48 | RG 10K +–1% TK100 0603 SMD RESISTOR EIA0603 | 0009.5357.00 | DALE | CRCW 0603 | 1100.0908.01 |
| R49 | RG 10K +–1% TK100 0603 SMD RESISTOR EIA0603 | 0009.5357.00 | DALE | CRCW 0603 | 1100.0908.01 |
| R50 | RG 10K +–1% TK100 0603 SMD RESISTOR EIA0603 | 0009.5357.00 | DALE | CRCW 0603 | 1100.0908.01 |
| R51 | RG 10K +–1% TK100 0603 SMD RESISTOR EIA0603 | 0009.5357.00 | DALE | CRCW 0603 | 1100.0908.01 |
| R52 | RG 10K +–1% TK100 0603 SMD RESISTOR EIA0603 | 0009.5357.00 | DALE | CRCW 0603 | 1100.0908.01 |
| R53 | RG 10K +–1% TK100 0603 SMD RESISTOR EIA0603 | 0009.5357.00 | DALE | CRCW 0603 | 1100.0908.01 |
| R54 | RG 10K +–1% TK100 0603 SMD RESISTOR EIA0603 | 0009.5357.00 | DALE | CRCW 0603 | 1100.0908.01 |
| R55 | RG 10K +–1% TK100 0603 SMD RESISTOR EIA0603 | 0009.5357.00 | DALE | CRCW 0603 | 1100.0908.01 |
| R56 | RG 10K +–1% TK100 0603 SMD RESISTOR EIA0603 | 0009.5357.00 | DALE | CRCW 0603 | 1100.0908.01 |
| R57 | RG 10K +–1% TK100 0603 SMD RESISTOR EIA0603 | 0009.5357.00 | DALE | CRCW 0603 | 1100.0908.01 |
| R58 | RG 10K +–1% TK100 0603 SMD RESISTOR EIA0603 | 0009.5357.00 | DALE | CRCW 0603 | 1100.0908.01 |
| R59 | RG 10K +–1% TK100 0603 SMD RESISTOR EIA0603 | 0009.5357.00 | DALE | CRCW 0603 | 1100.0908.01 |
| R60 | RG 10K +–1% TK100 0603 SMD RESISTOR EIA0603 | 0009.5357.00 | DALE | CRCW 0603 | 1100.0908.01 |
| R61 | RG 10K +–1% TK100 0603 SMD RESISTOR EIA0603 | 0009.5357.00 | DALE | CRCW 0603 | 1100.0908.01 |
| R62 | RG 10K +–1% TK100 0603 SMD RESISTOR EIA0603 | 0009.5357.00 | DALE | CRCW 0603 | 1100.0908.01 |
| R63 | RG 10K +–1% TK100 0603 | 0009.5357.00 | DALE | CRCW 0603 | 1100.0908.01 |




Für diese Unterlage behalten wir uns alle Rechte vor
*For this document all rights reserved*

| el. Kennz. *Part* | Benennung *Designation* | Sachnummer *Stock No.* | Hersteller *Manufacturer* | Bezeichnung *Designation* | enthalten in *contained in* |
|---|---|---|---|---|---|
| | SMD RESISTOR EIA0603 | | | | |
| R64 | RG 61R9 +–1%TK100 0603 SMD RESISTOR EIA0603 | 0048.4841.00 | DALE | CRCW 0603 | 1100.0908.01 |
| R65 | RG 61R9 +–1%TK100 0603 SMD RESISTOR EIA0603 | 0048.4841.00 | DALE | CRCW 0603 | 1100.0908.01 |
| R66 | RG 61R9 +–1%TK100 0603 SMD RESISTOR EIA0603 | 0048.4841.00 | DALE | CRCW 0603 | 1100.0908.01 |
| R67 | RG 61R9 +–1%TK100 0603 SMD RESISTOR EIA0603 | 0048.4841.00 | DALE | CRCW 0603 | 1100.0908.01 |
| R68 | RG 61R9 +–1%TK100 0603 SMD RESISTOR EIA0603 | 0048.4841.00 | DALE | CRCW 0603 | 1100.0908.01 |
| R69 | RG 61R9 +–1%TK100 0603 SMD RESISTOR EIA0603 | 0048.4841.00 | DALE | CRCW 0603 | 1100.0908.01 |
| R70 | RG 61R9 +–1%TK100 0603 SMD RESISTOR EIA0603 | 0048.4841.00 | DALE | CRCW 0603 | 1100.0908.01 |
| R71 | RG 61R9 +–1%TK100 0603 SMD RESISTOR EIA0603 | 0048.4841.00 | DALE | CRCW 0603 | 1100.0908.01 |
| R72 | RG 61R9 +–1%TK100 0603 SMD RESISTOR EIA0603 | 0048.4841.00 | DALE | CRCW 0603 | 1100.0908.01 |
| R73 | RG 61R9 +–1%TK100 0603 SMD RESISTOR EIA0603 | 0048.4841.00 | DALE | CRCW 0603 | 1100.0908.01 |
| R74 | RG 61R9 +–1%TK100 0603 SMD RESISTOR EIA0603 | 0048.4841.00 | DALE | CRCW 0603 | 1100.0908.01 |
| R75 | RG 61R9 +–1%TK100 0603 SMD RESISTOR EIA0603 | 0048.4841.00 | DALE | CRCW 0603 | 1100.0908.01 |
| R76 | RG 61R9 +–1%TK100 0603 SMD RESISTOR EIA0603 | 0048.4841.00 | DALE | CRCW 0603 | 1100.0908.01 |
| R77 | RG 61R9 +–1%TK100 0603 SMD RESISTOR EIA0603 | 0048.4841.00 | DALE | CRCW 0603 | 1100.0908.01 |
| R78 | RG 61R9 +–1%TK100 0603 SMD RESISTOR EIA0603 | 0048.4841.00 | DALE | CRCW 0603 | 1100.0908.01 |
| R79 | RG 61R9 +–1%TK100 0603 SMD RESISTOR EIA0603 | 0048.4841.00 | DALE | CRCW 0603 | 1100.0908.01 |
| R80 | RG 61R9 +–1%TK100 0603 SMD RESISTOR EIA0603 | 0048.4841.00 | DALE | CRCW 0603 | 1100.0908.01 |
| R81 | RG 61R9 +–1%TK100 0603 SMD RESISTOR EIA0603 | 0048.4841.00 | DALE | CRCW 0603 | 1100.0908.01 |
| R82 | RG 61R9 +–1%TK100 0603 SMD RESISTOR EIA0603 | 0048.4841.00 | DALE | CRCW 0603 | 1100.0908.01 |
| R83 | RG 61R9 +–1%TK100 0603 SMD RESISTOR EIA0603 | 0048.4841.00 | DALE | CRCW 0603 | 1100.0908.01 |
| R84 | RG 61R9 +–1%TK100 0603 SMD RESISTOR EIA0603 | 0048.4841.00 | DALE | CRCW 0603 | 1100.0908.01 |
| R85 | RG 61R9 +–1%TK100 0603 SMD RESISTOR EIA0603 | 0048.4841.00 | DALE | CRCW 0603 | 1100.0908.01 |
| R86 | RG 61R9 +–1%TK100 0603 SMD RESISTOR EIA0603 | 0048.4841.00 | DALE | CRCW 0603 | 1100.0908.01 |
| R87 | RG 61R9 +–1%TK100 0603 SMD RESISTOR EIA0603 | 0048.4841.00 | DALE | CRCW 0603 | 1100.0908.01 |
| R88 | RG 61R9 +–1%TK100 0603 SMD RESISTOR EIA0603 | 0048.4841.00 | DALE | CRCW 0603 | 1100.0908.01 |
| R89 | RG 61R9 +–1%TK100 0603 SMD RESISTOR EIA0603 | 0048.4841.00 | DALE | CRCW 0603 | 1100.0908.01 |
| R90 | RG 61R9 +–1%TK100 0603 SMD RESISTOR EIA0603 | 0048.4841.00 | DALE | CRCW 0603 | 1100.0908.01 |
| R91 | RG 61R9 +–1%TK100 0603 SMD RESISTOR EIA0603 | 0048.4841.00 | DALE | CRCW 0603 | 1100.0908.01 |
| R92 | RG 61R9 +–1%TK100 0603 SMD RESISTOR EIA0603 | 0048.4841.00 | DALE | CRCW 0603 | 1100.0908.01 |

| el. Kennz. *Part* | Benennung *Designation* | Sachnummer *Stock No.* | Hersteller *Manufacturer* | Bezeichnung *Designation* | enthalten in *contained in* |
|---|---|---|---|---|---|
| R93 | RG 61R9 +–1%TK100 0603 SMD RESISTOR EIA0603 | 0048.4841.00 | DALE | CRCW 0603 | 1100.0908.01 |
| R94 | RG 61R9 +–1%TK100 0603 SMD RESISTOR EIA0603 | 0048.4841.00 | DALE | CRCW 0603 | 1100.0908.01 |
| R95 | RG 61R9 +–1%TK100 0603 SMD RESISTOR EIA0603 | 0048.4841.00 | DALE | CRCW 0603 | 1100.0908.01 |
| R96 | RG 61R9 +–1%TK100 0603 SMD RESISTOR EIA0603 | 0048.4841.00 | DALE | CRCW 0603 | 1100.0908.01 |
| R97 | RG 61R9 +–1%TK100 0603 SMD RESISTOR EIA0603 | 0048.4841.00 | DALE | CRCW 0603 | 1100.0908.01 |
| R98 | RG 61R9 +–1%TK100 0603 SMD RESISTOR EIA0603 | 0048.4841.00 | DALE | CRCW 0603 | 1100.0908.01 |
| R99 | RG 61R9 +–1%TK100 0603 SMD RESISTOR EIA0603 | 0048.4841.00 | DALE | CRCW 0603 | 1100.0908.01 |
| R100 | RG 61R9 +–1%TK100 0603 SMD RESISTOR EIA0603 | 0048.4841.00 | DALE | CRCW 0603 | 1100.0908.01 |
| R101 | RG 61R9 +–1%TK100 0603 SMD RESISTOR EIA0603 | 0048.4841.00 | DALE | CRCW 0603 | 1100.0908.01 |
| R102 | RG 61R9 +–1%TK100 0603 SMD RESISTOR EIA0603 | 0048.4841.00 | DALE | CRCW 0603 | 1100.0908.01 |
| R103 | RG 61R9 +–1%TK100 0603 SMD RESISTOR EIA0603 | 0048.4841.00 | DALE | CRCW 0603 | 1100.0908.01 |
| R104 | RG 61R9 +–1%TK100 0603 SMD RESISTOR EIA0603 | 0048.4841.00 | DALE | CRCW 0603 | 1100.0908.01 |
| R105 | RG 0–OHM WIDERSTAND 0603 SMD RESISTOR EIA0603 NICHT BESTUECKT | 0009.9369.00 | BEYSCHLAG | MCT 0603 JUMPER | 1100.0908.01 |
| R106 | RG 0–OHM WIDERSTAND 0603 SMD RESISTOR EIA0603 NICHT BESTUECKT | 0009.9369.00 | BEYSCHLAG | MCT 0603 JUMPER | 1100.0908.01 |
| R107 | RG 0–OHM WIDERSTAND 0603 SMD RESISTOR EIA0603 NICHT BESTUECKT | 0009.9369.00 | BEYSCHLAG | MCT 0603 JUMPER | 1100.0908.01 |
| R108 | RG 0–OHM WIDERSTAND 0603 SMD RESISTOR EIA0603 NICHT BESTUECKT | 0009.9369.00 | BEYSCHLAG | MCT 0603 JUMPER | 1100.0908.01 |
| R109 | RG 0–OHM WIDERSTAND 0603 SMD RESISTOR EIA0603 NICHT BESTUECKT | 0009.9369.00 | BEYSCHLAG | MCT 0603 JUMPER | 1100.0908.01 |
| R110 | RG 0–OHM WIDERSTAND 0603 SMD RESISTOR EIA0603 | 0009.9369.00 | BEYSCHLAG | MCT 0603 JUMPER | 1100.0908.01 |
| R111 | RG 0–OHM WIDERSTAND 0603 SMD RESISTOR EIA0603 | 0009.9369.00 | BEYSCHLAG | MCT 0603 JUMPER | 1100.0908.01 |
| R112 | RG 0–OHM WIDERSTAND 0603 SMD RESISTOR EIA0603 NICHT BESTUECKT | 0009.9369.00 | BEYSCHLAG | MCT 0603 JUMPER | 1100.0908.01 |
| R113 | RG 0–OHM WIDERSTAND 0603 SMD RESISTOR EIA0603 NICHT BESTUECKT | 0009.9369.00 | BEYSCHLAG | MCT 0603 JUMPER | 1100.0908.01 |
| R114 | RG 0–OHM WIDERSTAND 0603 SMD RESISTOR EIA0603 NICHT BESTUECKT | 0009.9369.00 | BEYSCHLAG | MCT 0603 JUMPER | 1100.0908.01 |
| R115 | RG 0–OHM WIDERSTAND 0603 SMD RESISTOR EIA0603 NICHT BESTUECKT | 0009.9369.00 | BEYSCHLAG | MCT 0603 JUMPER | 1100.0908.01 |
| R116 | RG 0–OHM WIDERSTAND 0603 SMD RESISTOR EIA0603 NICHT BESTUECKT | 0009.9369.00 | BEYSCHLAG | MCT 0603 JUMPER | 1100.0908.01 |
| R117 | RG 0–OHM WIDERSTAND 0603 SMD RESISTOR EIA0603 NICHT BESTUECKT | 0009.9369.00 | BEYSCHLAG | MCT 0603 JUMPER | 1100.0908.01 |
| R118 | RG 0–OHM WIDERSTAND 0603 | 0009.9369.00 | BEYSCHLAG | MCT 0603 JUMPER | 1100.0908.01 |




Für diese Unterlage behalten wir uns alle Rechte vor
*For this document all rights reserved*

| el. Kennz. *Part* | Benennung *Designation* | Sachnummer *Stock No.* | Hersteller *Manufacturer* | Bezeichnung *Designation* | enthalten in *contained in* |
|---|---|---|---|---|---|
| | SMD RESISTOR EIA0603<br>NICHT BESTUECKT | | | | |
| R119 | RG 0–OHM WIDERSTAND 0603<br>SMD RESISTOR EIA0603 | 0009.9369.00 | BEYSCHLAG | MCT 0603 JUMPER | 1100.0908.01 |
| R120 | RG 0–OHM WIDERSTAND 0603<br>SMD RESISTOR EIA0603 | 0009.9369.00 | BEYSCHLAG | MCT 0603 JUMPER | 1100.0908.01 |
| R121 | RG 0–OHM WIDERSTAND 0603<br>SMD RESISTOR EIA0603 | 0009.9369.00 | BEYSCHLAG | MCT 0603 JUMPER | 1100.0908.01 |
| R122 | RG 0–OHM WIDERSTAND 0603<br>SMD RESISTOR EIA0603 | 0009.9369.00 | BEYSCHLAG | MCT 0603 JUMPER | 1100.0908.01 |
| R123 | RG 0–OHM WIDERSTAND 0603<br>SMD RESISTOR EIA0603 | 0009.9369.00 | BEYSCHLAG | MCT 0603 JUMPER | 1100.0908.01 |
| R124 | RG 0–OHM WIDERSTAND 0603<br>SMD RESISTOR EIA0603 | 0009.9369.00 | BEYSCHLAG | MCT 0603 JUMPER | 1100.0908.01 |
| R125 | RG 0–OHM WIDERSTAND 0603<br>SMD RESISTOR EIA0603 | 0009.9369.00 | BEYSCHLAG | MCT 0603 JUMPER | 1100.0908.01 |
| R126 | RG 0–OHM WIDERSTAND 0603<br>SMD RESISTOR EIA0603 | 0009.9369.00 | BEYSCHLAG | MCT 0603 JUMPER | 1100.0908.01 |
| R127 | RG 0–OHM WIDERSTAND 0603<br>SMD RESISTOR EIA0603 | 0009.9369.00 | BEYSCHLAG | MCT 0603 JUMPER | 1100.0908.01 |
| R128 | RG 0–OHM WIDERSTAND 0603<br>SMD RESISTOR EIA0603 | 0009.9369.00 | BEYSCHLAG | MCT 0603 JUMPER | 1100.0908.01 |
| R129 | RG 0–OHM WIDERSTAND 0603<br>SMD RESISTOR EIA0603 | 0009.9369.00 | BEYSCHLAG | MCT 0603 JUMPER | 1100.0908.01 |
| R130 | RG 0–OHM WIDERSTAND 0603<br>SMD RESISTOR EIA0603 | 0009.9369.00 | BEYSCHLAG | MCT 0603 JUMPER | 1100.0908.01 |
| R131 | RG 0–OHM WIDERSTAND 0603<br>SMD RESISTOR EIA0603 | 0009.9369.00 | BEYSCHLAG | MCT 0603 JUMPER | 1100.0908.01 |
| R132 | RG 0–OHM WIDERSTAND 0603<br>SMD RESISTOR EIA0603 | 0009.9369.00 | BEYSCHLAG | MCT 0603 JUMPER | 1100.0908.01 |
| R133 | RG 68R +–1% TK100 0603<br>SMD RESISTOR EIA0603 | 0009.6930.00 | DALE | CRCW 0603 | 1100.0908.01 |
| R134 | RG 68R +–1% TK100 0603<br>SMD RESISTOR EIA0603 | 0009.6930.00 | DALE | CRCW 0603 | 1100.0908.01 |
| R135 | RG 68R +–1% TK100 0603<br>SMD RESISTOR EIA0603 | 0009.6930.00 | DALE | CRCW 0603 | 1100.0908.01 |
| R136 | RG 68R +–1% TK100 0603<br>SMD RESISTOR EIA0603 | 0009.6930.00 | DALE | CRCW 0603 | 1100.0908.01 |
| R137 | RG 68R +–1% TK100 0603<br>SMD RESISTOR EIA0603 | 0009.6930.00 | DALE | CRCW 0603 | 1100.0908.01 |
| R138 | RG 68R +–1% TK100 0603<br>SMD RESISTOR EIA0603 | 0009.6930.00 | DALE | CRCW 0603 | 1100.0908.01 |
| R139 | RG 68R +–1% TK100 0603<br>SMD RESISTOR EIA0603 | 0009.6930.00 | DALE | CRCW 0603 | 1100.0908.01 |
| R140 | RG 68R +–1% TK100 0603<br>SMD RESISTOR EIA0603 | 0009.6930.00 | DALE | CRCW 0603 | 1100.0908.01 |
| R141 | RG 68R +–1% TK100 0603<br>SMD RESISTOR EIA0603 | 0009.6930.00 | DALE | CRCW 0603 | 1100.0908.01 |
| R142 | RG 68R +–1% TK100 0603<br>SMD RESISTOR EIA0603 | 0009.6930.00 | DALE | CRCW 0603 | 1100.0908.01 |
| R143 | RG 68R +–1% TK100 0603<br>SMD RESISTOR EIA0603 | 0009.6930.00 | DALE | CRCW 0603 | 1100.0908.01 |
| R144 | RG 68R +–1% TK100 0603<br>SMD RESISTOR EIA0603 | 0009.6930.00 | DALE | CRCW 0603 | 1100.0908.01 |
| R145 | RG 68R +–1% TK100 0603<br>SMD RESISTOR EIA0603 | 0009.6930.00 | DALE | CRCW 0603 | 1100.0908.01 |
| R146 | RG 68R +–1% TK100 0603<br>SMD RESISTOR EIA0603 | 0009.6930.00 | DALE | CRCW 0603 | 1100.0908.01 |
| R147 | RG 68R +–1% TK100 0603 | 0009.6930.00 | DALE | CRCW 0603 | 1100.0908.01 |

| el. Kennz. *Part* | Benennung *Designation* | Sachnummer *Stock No.* | Hersteller *Manufacturer* | Bezeichnung *Designation* | enthalten in *contained in* |
|---|---|---|---|---|---|
| | SMD RESISTOR EIA0603 | | | | |
| R148 | RG 68R +–1% TK100 0603<br>SMD RESISTOR EIA0603 | 0009.6930.00 | DALE | CRCW 0603 | 1100.0908.01 |
| R149 | RG 68R +–1% TK100 0603<br>SMD RESISTOR EIA0603 | 0009.6930.00 | DALE | CRCW 0603 | 1100.0908.01 |
| R150 | RG 68R +–1% TK100 0603<br>SMD RESISTOR EIA0603 | 0009.6930.00 | DALE | CRCW 0603 | 1100.0908.01 |
| R151 | RG 68R +–1% TK100 0603<br>SMD RESISTOR EIA0603 | 0009.6930.00 | DALE | CRCW 0603 | 1100.0908.01 |
| R152 | RG 68R +–1% TK100 0603<br>SMD RESISTOR EIA0603 | 0009.6930.00 | DALE | CRCW 0603 | 1100.0908.01 |
| R153 | RG 68R +–1% TK100 0603<br>SMD RESISTOR EIA0603 | 0009.6930.00 | DALE | CRCW 0603 | 1100.0908.01 |
| R154 | RG 68R +–1% TK100 0603<br>SMD RESISTOR EIA0603 | 0009.6930.00 | DALE | CRCW 0603 | 1100.0908.01 |
| R155 | RG 68R +–1% TK100 0603<br>SMD RESISTOR EIA0603 | 0009.6930.00 | DALE | CRCW 0603 | 1100.0908.01 |
| R156 | RG 68R +–1% TK100 0603<br>SMD RESISTOR EIA0603 | 0009.6930.00 | DALE | CRCW 0603 | 1100.0908.01 |
| R157 | RG 68R +–1% TK100 0603<br>SMD RESISTOR EIA0603 | 0009.6930.00 | DALE | CRCW 0603 | 1100.0908.01 |
| R158 | RG 68R +–1% TK100 0603<br>SMD RESISTOR EIA0603 | 0009.6930.00 | DALE | CRCW 0603 | 1100.0908.01 |
| R159 | RG 68R +–1% TK100 0603<br>SMD RESISTOR EIA0603 | 0009.6930.00 | DALE | CRCW 0603 | 1100.0908.01 |
| R160 | RG 68R +–1% TK100 0603<br>SMD RESISTOR EIA0603 | 0009.6930.00 | DALE | CRCW 0603 | 1100.0908.01 |
| R161 | RG 68R +–1% TK100 0603<br>SMD RESISTOR EIA0603 | 0009.6930.00 | DALE | CRCW 0603 | 1100.0908.01 |
| R162 | RG 68R +–1% TK100 0603<br>SMD RESISTOR EIA0603 | 0009.6930.00 | DALE | CRCW 0603 | 1100.0908.01 |
| R163 | RG 68R +–1% TK100 0603<br>SMD RESISTOR EIA0603 | 0009.6930.00 | DALE | CRCW 0603 | 1100.0908.01 |
| R164 | RG 68R +–1% TK100 0603<br>SMD RESISTOR EIA0603 | 0009.6930.00 | DALE | CRCW 0603 | 1100.0908.01 |
| R165 | RG 0–OHM WIDERSTAND 0603<br>SMD RESISTOR EIA0603<br>NICHT BESTUECKT | 0009.9369.00 | BEYSCHLAG | MCT 0603 JUMPER | 1100.0908.01 |
| R166 | RG 0–OHM WIDERSTAND 0603<br>SMD RESISTOR EIA0603<br>NICHT BESTUECKT | 0009.9369.00 | BEYSCHLAG | MCT 0603 JUMPER | 1100.0908.01 |
| R167 | RG 0–OHM WIDERSTAND 0603<br>SMD RESISTOR EIA0603<br>NICHT BESTUECKT | 0009.9369.00 | BEYSCHLAG | MCT 0603 JUMPER | 1100.0908.01 |
| R168 | RG 0–OHM WIDERSTAND 0603<br>SMD RESISTOR EIA0603<br>NICHT BESTUECKT | 0009.9369.00 | BEYSCHLAG | MCT 0603 JUMPER | 1100.0908.01 |
| R169 | RG 0–OHM WIDERSTAND 0603<br>SMD RESISTOR EIA0603<br>NICHT BESTUECKT | 0009.9369.00 | BEYSCHLAG | MCT 0603 JUMPER | 1100.0908.01 |
| R170 | RG 0–OHM WIDERSTAND 0603<br>SMD RESISTOR EIA0603<br>NICHT BESTUECKT | 0009.9369.00 | BEYSCHLAG | MCT 0603 JUMPER | 1100.0908.01 |
| R171 | RG 0–OHM WIDERSTAND 0603<br>SMD RESISTOR EIA0603<br>NICHT BESTUECKT | 0009.9369.00 | BEYSCHLAG | MCT 0603 JUMPER | 1100.0908.01 |
| R172 | RG 68R +–1% TK100 0603<br>SMD RESISTOR EIA0603 | 0009.6930.00 | DALE | CRCW 0603 | 1100.0908.01 |
| R173 | RG 0–OHM WIDERSTAND 0603<br>SMD RESISTOR EIA0603<br>NICHT BESTUECKT | 0009.9369.00 | BEYSCHLAG | MCT 0603 JUMPER | 1100.0908.01 |




Für diese Unterlage behalten wir uns alle Rechte vor.
*For this document all rights reserved*

| el. Kennz. *Part* | Benennung *Designation* | Sachnummer *Stock No.* | Hersteller *Manufacturer* | Bezeichnung *Designation* | enthalten in *contained in* |
|---|---|---|---|---|---|
| R174 | RG 0–OHM WIDERSTAND 0603<br>SMD RESISTOR EIA0603<br>NICHT BESTUECKT | 0009.9369.00 | BEYSCHLAG | MCT 0603 JUMPER | 1100.0908.01 |
| R175 | RG 0–OHM WIDERSTAND 0603<br>SMD RESISTOR EIA0603<br>NICHT BESTUECKT | 0009.9369.00 | BEYSCHLAG | MCT 0603 JUMPER | 1100.0908.01 |
| R176 | RG 0–OHM WIDERSTAND 0603<br>SMD RESISTOR EIA0603<br>NICHT BESTUECKT | 0009.9369.00 | BEYSCHLAG | MCT 0603 JUMPER | 1100.0908.01 |
| R177 | RG 0R75 5% 1W 1218<br>SMD RESISTOR | 1100.3671.00 | DALE | CRCW1218 0R75 1% TK | 1100.0908.01 |
| R178 | RG 1K0 +–1% TK100 0603<br>SMD RESISTOR EIA0603 | 0009.5340.00 | DALE | CRCW 0603 | 1100.0908.01 |
| R179 | RG 1K0 +–1% TK100 0603<br>SMD RESISTOR EIA0603 | 0009.5340.00 | DALE | CRCW 0603 | 1100.0908.01 |
| R180 | RG 1K0 +–1% TK100 0603<br>SMD RESISTOR EIA0603 | 0009.5340.00 | DALE | CRCW 0603 | 1100.0908.01 |
| R181 | RG 1K0 +–1% TK100 0603<br>SMD RESISTOR EIA0603 | 0009.5340.00 | DALE | CRCW 0603 | 1100.0908.01 |
| R182 | RG 1K0 +–1% TK100 0603<br>SMD RESISTOR EIA0603 | 0009.5340.00 | DALE | CRCW 0603 | 1100.0908.01 |
| R183 | RG 1K0 +–1% TK100 0603<br>SMD RESISTOR EIA0603 | 0009.5340.00 | DALE | CRCW 0603 | 1100.0908.01 |
| R184 | RG 1K0 +–1% TK100 0603<br>SMD RESISTOR EIA0603 | 0009.5340.00 | DALE | CRCW 0603 | 1100.0908.01 |
| R185 | RG 27R4 +–1%TK100 0603<br>SMD RESISTOR EIA0603 | 0009.9046.00 | DALE | CRCW 0603 | 1100.0908.01 |
| R186 | RG 27R4 +–1%TK100 0603<br>SMD RESISTOR EIA0603 | 0009.9046.00 | DALE | CRCW 0603 | 1100.0908.01 |
| R187 | RG 27R4 +–1%TK100 0603<br>SMD RESISTOR EIA0603 | 0009.9046.00 | DALE | CRCW 0603 | 1100.0908.01 |
| R188 | RG 27R4 +–1%TK100 0603<br>SMD RESISTOR EIA0603 | 0009.9046.00 | DALE | CRCW 0603 | 1100.0908.01 |
| R189 | RG 27R4 +–1%TK100 0603<br>SMD RESISTOR EIA0603 | 0009.9046.00 | DALE | CRCW 0603 | 1100.0908.01 |
| R190 | RG 27R4 +–1%TK100 0603<br>SMD RESISTOR EIA0603 | 0009.9046.00 | DALE | CRCW 0603 | 1100.0908.01 |
| R191 | RG 27R4 +–1%TK100 0603<br>SMD RESISTOR EIA0603 | 0009.9046.00 | DALE | CRCW 0603 | 1100.0908.01 |
| R192 | RG 27R4 +–1%TK100 0603<br>SMD RESISTOR EIA0603 | 0009.9046.00 | DALE | CRCW 0603 | 1100.0908.01 |
| R193 | RG 27R4 +–1%TK100 0603<br>SMD RESISTOR EIA0603 | 0009.9046.00 | DALE | CRCW 0603 | 1100.0908.01 |
| R194 | RG 27R4 +–1%TK100 0603<br>SMD RESISTOR EIA0603 | 0009.9046.00 | DALE | CRCW 0603 | 1100.0908.01 |
| R195 | RG 27R4 +–1%TK100 0603<br>SMD RESISTOR EIA0603 | 0009.9046.00 | DALE | CRCW 0603 | 1100.0908.01 |
| R196 | RG 27R4 +–1%TK100 0603<br>SMD RESISTOR EIA0603 | 0009.9046.00 | DALE | CRCW 0603 | 1100.0908.01 |
| R197 | RG 27R4 +–1%TK100 0603<br>SMD RESISTOR EIA0603 | 0009.9046.00 | DALE | CRCW 0603 | 1100.0908.01 |
| R198 | RG 27R4 +–1%TK100 0603<br>SMD RESISTOR EIA0603 | 0009.9046.00 | DALE | CRCW 0603 | 1100.0908.01 |
| R199 | RG 27R4 +–1%TK100 0603<br>SMD RESISTOR EIA0603 | 0009.9046.00 | DALE | CRCW 0603 | 1100.0908.01 |
| R200 | RG 27R4 +–1%TK100 0603<br>SMD RESISTOR EIA0603 | 0009.9046.00 | DALE | CRCW 0603 | 1100.0908.01 |
| R201 | RG 0R1 5% 1W 1218<br>SMD–RESISTOR | 6100.7785.00 | DALE | CRCW1218 0R1 5%TK200 | 1100.0908.01 |
| R202 | RG 200K +–1% TK100 0603 | 1093.6200.00 | DALE | CRCW 0603 | 1100.0908.01 |

| el. Kennz. *Part* | Benennung *Designation* | Sachnummer *Stock No.* | Hersteller *Manufacturer* | Bezeichnung *Designation* | enthalten in *contained in* |
|---|---|---|---|---|---|
| | SMD RESISTOR EIA0603<br>NICHT BESTUECKT | | | | |
| R203 | RG 200K +–1% TK100 0603<br>SMD RESISTOR EIA0603 | 1093.6200.00 | DALE | CRCW 0603 | 1100.0908.01 |
| R204 | RG 10K +–1% TK100 0603<br>SMD RESISTOR EIA0603 | 0009.5357.00 | DALE | CRCW 0603 | 1100.0908.01 |
| R205 | RG 1K37 +–1% TK100 0603<br>SMD RESISTOR EIA0603 | 1097.6111.00 | DALE | CRCW 0603 | 1100.0908.01 |
| R206 | RG 5K62 +–1% TK100 0603<br>SMD RESISTOR EIA0603<br>NICHT BESTUECKT | 0010.8433.00 | DALE | CRCW 0603 | 1100.0908.01 |
| R207 | RG 13K +–1% TK100 0603<br>SMD RESISTOR EIA0603<br>NICHT BESTUECKT | 1097.6428.00 | DALE | CRCW 0603 | 1100.0908.01 |
| R208 | RG 150K +–1% TK100 0603<br>SMD RESISTOR EIA0603<br>NICHT BESTUECKT | 0009.7095.00 | DALE | CRCW 0603 | 1100.0908.01 |
| R209 | RG 2K2 +–1% TK100 0603<br>SMD RESISTOR EIA0603 | 0009.7008.00 | DALE | CRCW 0603 | 1100.0908.01 |
| R210 | RG 22K +–1% TK100 0603<br>SMD RESISTOR EIA0603 | 0009.7050.00 | DALE | CRCW 0603 | 1100.0908.01 |
| R211 | RG 22K +–1% TK100 0603<br>SMD RESISTOR EIA0603 | 0009.7050.00 | DALE | CRCW 0603 | 1100.0908.01 |
| R212 | RG 1K0 +–1% TK100 0603<br>SMD RESISTOR EIA0603 | 0009.5340.00 | DALE | CRCW 0603 | 1100.0908.01 |
| R213 | RG 1K0 +–1% TK100 0603<br>SMD RESISTOR EIA0603<br>NICHT BESTUECKT | 0009.5340.00 | DALE | CRCW 0603 | 1100.0908.01 |
| R214 | RG 1K0 +–1% TK100 0603<br>SMD RESISTOR EIA0603<br>NICHT BESTUECKT | 0009.5340.00 | DALE | CRCW 0603 | 1100.0908.01 |
| R215 | RG 4K32 +–1% TK100 0603<br>SMD–RESISTOR EIA0603 | 0048.6438.00 | DALE | CRCW 0603 | 1100.0908.01 |
| R216 | RG 4K32 +–1% TK100 0603<br>SMD–RESISTOR EIA0603<br>NICHT BESTUECKT | 0048.6438.00 | DALE | CRCW 0603 | 1100.0908.01 |
| R217 | RG 0–OHM WIDERSTAND 0603<br>SMD RESISTOR EIA0603 | 0009.9369.00 | BEYSCHLAG | MCT 0603 JUMPER | 1100.0908.01 |
| R218 | RG 0–OHM WIDERSTAND 0603<br>SMD RESISTOR EIA0603 | 0009.9369.00 | BEYSCHLAG | MCT 0603 JUMPER | 1100.0908.01 |
| R219 | RG 0–OHM WIDERSTAND 0603<br>SMD RESISTOR EIA0603 | 0009.9369.00 | BEYSCHLAG | MCT 0603 JUMPER | 1100.0908.01 |
| R220 | RG 0–OHM WIDERSTAND 0603<br>SMD RESISTOR EIA0603 | 0009.9369.00 | BEYSCHLAG | MCT 0603 JUMPER | 1100.0908.01 |
| R221 | RG 0–OHM WIDERSTAND 0603<br>SMD RESISTOR EIA0603 | 0009.9369.00 | BEYSCHLAG | MCT 0603 JUMPER | 1100.0908.01 |
| R222 | RG 0–OHM WIDERSTAND 0603<br>SMD RESISTOR EIA0603 | 0009.9369.00 | BEYSCHLAG | MCT 0603 JUMPER | 1100.0908.01 |
| R223 | RG 0–OHM WIDERSTAND 0603<br>SMD RESISTOR EIA0603 | 0009.9369.00 | BEYSCHLAG | MCT 0603 JUMPER | 1100.0908.01 |
| R224 | RG 0–OHM WIDERSTAND 0603<br>SMD RESISTOR EIA0603 | 0009.9369.00 | BEYSCHLAG | MCT 0603 JUMPER | 1100.0908.01 |
| R225 | RG 0–OHM WIDERSTAND 0603<br>SMD RESISTOR EIA0603 | 0009.9369.00 | BEYSCHLAG | MCT 0603 JUMPER | 1100.0908.01 |
| R226 | RG 0–OHM WIDERSTAND 0603<br>SMD RESISTOR EIA0603 | 0009.9369.00 | BEYSCHLAG | MCT 0603 JUMPER | 1100.0908.01 |
| R227 | RG 0–OHM WIDERSTAND 0603<br>SMD RESISTOR EIA0603 | 0009.9369.00 | BEYSCHLAG | MCT 0603 JUMPER | 1100.0908.01 |
| R228 | RG 0–OHM WIDERSTAND 0603<br>SMD RESISTOR EIA0603 | 0009.9369.00 | BEYSCHLAG | MCT 0603 JUMPER | 1100.0908.01 |
| R229 | RG 1K0 +–1% TK100 1206 | 0006.7271.00 | BOURNS INC | CR 1206 FX–...– E | 1100.0908.01 |




Für diese Unterlage behalten wir uns alle Rechte vor.
*For this document all rights reserved*

| el. Kennz. *Part* | Benennung *Designation* | Sachnummer *Stock No.* | Hersteller *Manufacturer* | Bezeichnung *Designation* | enthalten in *contained in* |
|---|---|---|---|---|---|
| | CHIP RESISTOR | | | | |
| R230 | RG 100K +–1% TK100 0603<br>SMD RESISTOR EIA0603 | 0009.5363.00 | DALE | CRCW 0603 | 1100.0908.01 |
| R231 | RG 0–OHM WIDERSTAND 0603<br>SMD RESISTOR EIA0603 | 0009.9369.00 | BEYSCHLAG | MCT 0603 JUMPER | 1100.0908.01 |
| R232 | RG 0–OHM WIDERSTAND 0603<br>SMD RESISTOR EIA0603 | 0009.9369.00 | BEYSCHLAG | MCT 0603 JUMPER | 1100.0908.01 |
| R233 | RG 0–OHM WIDERSTAND 0603<br>SMD RESISTOR EIA0603<br>NICHT BESTUECKT | 0009.9369.00 | BEYSCHLAG | MCT 0603 JUMPER | 1100.0908.01 |
| R234 | RG 0–OHM WIDERSTAND 0603<br>SMD RESISTOR EIA0603 | 0009.9369.00 | BEYSCHLAG | MCT 0603 JUMPER | 1100.0908.01 |
| R235 | RG 10K +–1% TK100 0603<br>SMD RESISTOR EIA0603 | 0009.5357.00 | DALE | CRCW 0603 | 1100.0908.01 |
| R236 | RG 10K +–1% TK100 0603<br>SMD RESISTOR EIA0603 | 0009.5357.00 | DALE | CRCW 0603 | 1100.0908.01 |
| R237 | RG 61R9 +–1%TK100 0603<br>SMD RESISTOR EIA0603 | 0048.4841.00 | DALE | CRCW 0603 | 1100.0908.01 |
| R238 | RG 0–OHM WIDERSTAND 0603<br>SMD RESISTOR EIA0603<br>NICHT BESTUECKT | 0009.9369.00 | BEYSCHLAG | MCT 0603 JUMPER | 1100.0908.01 |
| R239 | RG 20K +–1% TK100 0603<br>SMD RESISTOR EIA0603 | 0010.9100.00 | DALE | CRCW 0603 | 1100.0908.01 |
| R240 | RG 15K +–1% TK100 0603<br>SMD RESISTOR EIA0603 | 0009.7043.00 | DALE | CRCW 0603 | 1100.0908.01 |
| R241 | RG 15K +–1% TK100 0603<br>SMD RESISTOR EIA0603 | 0009.7043.00 | DALE | CRCW 0603 | 1100.0908.01 |
| R242 | RG 82K5 +–1% TK100 0603<br>SMD RESISTOR EIA0603<br>NICHT BESTUECKT | 0010.9123.00 | DALE | CRCW 0603 | 1100.0908.01 |
| R243 | RG 12K1 +–1% TK100 0603<br>SMD RESISTOR EIA0603 | 0010.8462.00 | DALE | CRCW 0603 | 1100.0908.01 |
| R244 | RG 12K1 +–1% TK100 0603<br>SMD RESISTOR EIA0603<br>NICHT BESTUECKT | 0010.8462.00 | DALE | CRCW 0603 | 1100.0908.01 |
| R245 | RG 392K+–1% TK100 0603<br>RESISTOR | 1097.6528.00 | DALE | CRCW 0603 | 1100.0908.01 |
| R246 | RG 220K +–1% TK100 0603<br>SMD RESISTOR EIA0603 | 0009.7108.00 | DALE | CRCW 0603 | 1100.0908.01 |
| R247 | RG 220K +–1% TK100 0603<br>SMD RESISTOR EIA0603 | 0009.7108.00 | DALE | CRCW 0603 | 1100.0908.01 |
| R248 | RG 1K91 +–1% TK100 0603<br>SMD RESISTOR EIA0603 | 1097.6128.00 | DALE | CRCW 0603 | 1100.0908.01 |
| R249 | RG 100R +–1% TK100 0603<br>SMD RESISTOR EIA0603 | 0009.5334.00 | DALE | CRCW 0603 | 1100.0908.01 |
| R250 | RG 100R +–1% TK100 0603<br>SMD RESISTOR EIA0603 | 0009.5334.00 | DALE | CRCW 0603 | 1100.0908.01 |
| R251 | RG 100R +–1% TK100 0603<br>SMD RESISTOR EIA0603 | 0009.5334.00 | DALE | CRCW 0603 | 1100.0908.01 |
| R252 | RG 100R +–1% TK100 0603<br>SMD RESISTOR EIA0603 | 0009.5334.00 | DALE | CRCW 0603 | 1100.0908.01 |
| R253 | RG 100R +–1% TK100 0603<br>SMD RESISTOR EIA0603 | 0009.5334.00 | DALE | CRCW 0603 | 1100.0908.01 |
| R254 | RG 100R +–1% TK100 0603<br>SMD RESISTOR EIA0603 | 0009.5334.00 | DALE | CRCW 0603 | 1100.0908.01 |
| R255 | RG 100R +–1% TK100 0603<br>SMD RESISTOR EIA0603 | 0009.5334.00 | DALE | CRCW 0603 | 1100.0908.01 |
| R256 | RG 100R +–1% TK100 0603<br>SMD RESISTOR EIA0603 | 0009.5334.00 | DALE | CRCW 0603 | 1100.0908.01 |
| R257 | RG 100R +–1% TK100 0603 | 0009.5334.00 | DALE | CRCW 0603 | 1100.0908.01 |

| el. Kennz. *Part* | Benennung *Designation* | Sachnummer *Stock No.* | Hersteller *Manufacturer* | Bezeichnung *Designation* | enthalten in *contained in* |
|---|---|---|---|---|---|
| | SMD RESISTOR EIA0603 | | | | |
| R258 | RG 220R +–1% TK100 0603<br>SMD RESISTOR EIA0603 | 0009.6953.00 | DALE | CRCW 0603 | 1100.0908.01 |
| R259 | RG 220R +–1% TK100 0603<br>SMD RESISTOR EIA0603 | 0009.6953.00 | DALE | CRCW 0603 | 1100.0908.01 |
| R260 | RG 220R +–1% TK100 0603<br>SMD RESISTOR EIA0603 | 0009.6953.00 | DALE | CRCW 0603 | 1100.0908.01 |
| R261 | RG 220R +–1% TK100 0603<br>SMD RESISTOR EIA0603 | 0009.6953.00 | DALE | CRCW 0603 | 1100.0908.01 |
| R262 | RG 0–OHM WIDERSTAND 0603<br>SMD RESISTOR EIA0603<br>NICHT BESTUECKT | 0009.9369.00 | BEYSCHLAG | MCT 0603 JUMPER | 1100.0908.01 |
| R263 | RG 61R9 +–1%TK100 0603<br>SMD RESISTOR EIA0603 | 0048.4841.00 | DALE | CRCW 0603 | 1100.0908.01 |
| V1 | AG PBYR245CT 2XSGL 45V 2A<br>DOUBLE SCHOTTKY RECTIFIER | 0009.5311.00 | PHILIPS SE | PBYR245CT | 1100.0908.01 |
| V2 | AG PBYR245CT 2XSGL 45V 2A<br>DOUBLE SCHOTTKY RECTIFIER | 0009.5311.00 | PHILIPS SE | PBYR245CT | 1100.0908.01 |
| V3 | AG PBYR245CT 2XSGL 45V 2A<br>DOUBLE SCHOTTKY RECTIFIER | 0009.5311.00 | PHILIPS SE | PBYR245CT | 1100.0908.01 |
| V4 | AG PBYR245CT 2XSGL 45V 2A<br>DOUBLE SCHOTTKY RECTIFIER | 0009.5311.00 | PHILIPS SE | PBYR245CT | 1100.0908.01 |
| V5 | AG PBYR245CT 2XSGL 45V 2A<br>DOUBLE SCHOTTKY RECTIFIER | 0009.5311.00 | PHILIPS SE | PBYR245CT | 1100.0908.01 |
| V6 | AG PBYR245CT 2XSGL 45V 2A<br>DOUBLE SCHOTTKY RECTIFIER | 0009.5311.00 | PHILIPS SE | PBYR245CT | 1100.0908.01 |
| V7 | AG PBYR245CT 2XSGL 45V 2A<br>DOUBLE SCHOTTKY RECTIFIER | 0009.5311.00 | PHILIPS SE | PBYR245CT | 1100.0908.01 |
| V8 | AG SS24 SGL 40V 2A<br>SCHOTTKY BARRIER<br>RECTIFIER | 1081.1880.00 | VISHAY INT | SS24 (MC: S4) | 1100.0908.01 |
| V9 | AG SS24 SGL 40V 2A<br>SCHOTTKY BARRIER<br>RECTIFIER | 1081.1880.00 | VISHAY INT | SS24 (MC: S4) | 1100.0908.01 |
| V10 | AG SS24 SGL 40V 2A<br>SCHOTTKY BARRIER<br>RECTIFIER | 1081.1880.00 | VISHAY INT | SS24 (MC: S4) | 1100.0908.01 |
| V11 | AG SS24 SGL 40V 2A<br>SCHOTTKY BARRIER<br>RECTIFIER | 1081.1880.00 | VISHAY INT | SS24 (MC: S4) | 1100.0908.01 |
| V12 | AG SS24 SGL 40V 2A<br>SCHOTTKY BARRIER<br>RECTIFIER | 1081.1880.00 | VISHAY INT | SS24 (MC: S4) | 1100.0908.01 |
| V13 | AG SS24 SGL 40V 2A<br>SCHOTTKY BARRIER<br>RECTIFIER | 1081.1880.00 | VISHAY INT | SS24 (MC: S4) | 1100.0908.01 |
| V14 | AG SS24 SGL 40V 2A<br>SCHOTTKY BARRIER<br>RECTIFIER | 1081.1880.00 | VISHAY INT | SS24 (MC: S4) | 1100.0908.01 |
| V15 | AG SS24 SGL 40V 2A<br>SCHOTTKY BARRIER<br>RECTIFIER | 1081.1880.00 | VISHAY INT | SS24 (MC: S4) | 1100.0908.01 |
| V16 | AG SS24 SGL 40V 2A<br>SCHOTTKY BARRIER<br>RECTIFIER | 1081.1880.00 | VISHAY INT | SS24 (MC: S4) | 1100.0908.01 |
| V17 | AG SS24 SGL 40V 2A<br>SCHOTTKY BARRIER<br>RECTIFIER | 1081.1880.00 | VISHAY INT | SS24 (MC: S4) | 1100.0908.01 |
| V18 | AG SS24 SGL 40V 2A<br>SCHOTTKY BARRIER<br>RECTIFIER | 1081.1880.00 | VISHAY INT | SS24 (MC: S4) | 1100.0908.01 |
| V19 | AG SS24 SGL 40V 2A<br>SCHOTTKY BARRIER | 1081.1880.00 | VISHAY INT | SS24 (MC: S4) | 1100.0908.01 |




Für diese Unterlage behalten wir uns alle Rechte vor.
*For this document all rights reserved*

| el. Kennz. *Part* | Benennung *Designation* | Sachnummer *Stock No.* | Hersteller *Manufacturer* | Bezeichnung *Designation* | enthalten in *contained in* |
|---|---|---|---|---|---|
| | RECTIFIER | | | | |
| V20 | AG SS24 SGL 40V 2A SCHOTTKY BARRIER RECTIFIER | 1081.1880.00 | VISHAY INT | SS24 (MC: S4) | 1100.0908.01 |
| V21 | AG SS24 SGL 40V 2A SCHOTTKY BARRIER RECTIFIER | 1081.1880.00 | VISHAY INT | SS24 (MC: S4) | 1100.0908.01 |
| V22 | AK BC860B P 45V 100MA TRANSISTOR | 0007.7975.00 | PHILIPS SE | BC860B | 1100.0908.01 |
| V23 | AK BC850B N 45V 100MA TRANSISTOR | 0007.7969.00 | PHILIPS SE | BC850B | 1100.0908.01 |
| V24 | AE BAS216 75V 250MA SWI HIGHSPEED SWITCHING DIODE | 0010.9346.00 | PHILIPS SE | BAS216 | 1100.0908.01 |
| V25 | AE BAS216 75V 250MA SWI HIGHSPEED SWITCHING DIODE NICHT BESTUECKT | 0010.9346.00 | PHILIPS SE | BAS216 | 1100.0908.01 |
| V26 | AE BAS216 75V 250MA SWI HIGHSPEED SWITCHING DIODE | 0010.9346.00 | PHILIPS SE | BAS216 | 1100.0908.01 |
| V27 | AK BCP68–25 NPN 20V 1A NPN TRANSISTOR | 0008.2019.00 | PHILIPS SE | BCP68–25 | 1100.0908.01 |
| V28 | AG PBYR245CT 2XSGL 45V 2A DOUBLE SCHOTTKY RECTIFIER | 0009.5311.00 | PHILIPS SE | PBYR245CT | 1100.0908.01 |
| V29 | AG SS24 SGL 40V 2A SCHOTTKY BARRIER RECTIFIER | 1081.1880.00 | VISHAY INT | SS24 (MC: S4) | 1100.0908.01 |
| V30 | AG SS24 SGL 40V 2A SCHOTTKY BARRIER RECTIFIER | 1081.1880.00 | VISHAY INT | SS24 (MC: S4) | 1100.0908.01 |
| W205 | DY KABEL W205 CABLE W205 | 1100.1085.00 | | | 1100.0908.01 |
| W206 | DY KABEL W206 CABLE W206 | 1100.1091.00 | | | 1100.0908.01 |
| W207 | DY KABEL W207 CABLE W207 | 1100.1056.00 | | | 1100.0908.01 |
| W208 | DY KABEL W208 CABLE W208 | 1100.1062.00 | | | 1100.0908.01 |
| W219 | DY KABEL W219 CABLE W219 | 1100.1079.00 | | | 1100.0908.01 |
| X10 | FP BUCHSENLEISTE 96P.WINK CONNECTOR | 6056.1746.00 | AMP | 536507–3 | 1100.0908.01 |
| X11 | FP BU.LEISTE COMP.BUS110P CONNECTOR | 1093.6546.00 | CANNON | CHMF–A25–P1–S–2 | 1100.0908.01 |
| X12 | FP BUCHSENLEISTE 96P.WINK CONNECTOR | 6056.1746.00 | AMP | 536507–3 | 1100.0908.01 |
| X21 | FP BUCHSENLEISTE 96P CONNECTOR | 1051.5564.00 | ERNI | 594.833 | 1100.0908.01 |
| X22 | FP BUCHSENLEISTE 96P CONNECTOR | 1051.5564.00 | ERNI | 594.833 | 1100.0908.01 |
| X31 | FP STECKERLEISTE 96P.GER. CONNECTOR | 1100.4410.00 | AMP | 2X536501–2 | 1100.0908.01 |
| X41 | FP STECKERLEISTE 96P.GER. CONNECTOR | 1100.4410.00 | AMP | 2X536501–2 | 1100.0908.01 |
| X51 | FP STECKERLEISTE 96P.GER. CONNECTOR | 1100.4410.00 | AMP | 2X536501–2 | 1100.0908.01 |
| X52 | FP STECKERLEISTE 96P.GER. CONNECTOR | 1100.4410.00 | AMP | 2X536501–2 | 1100.0908.01 |
| X61 | FP BUCHSENLEISTE 96P CONNECTOR | 1051.5564.00 | ERNI | 594.833 | 1100.0908.01 |
| X62 | FP STECKERLEISTE 48P.GER CONNECTOR | 0386.6340.00 | AMP | 536514–2 | 1100.0908.01 |

| el. Kennz. *Part* | Benennung *Designation* | Sachnummer *Stock No.* | Hersteller *Manufacturer* | Bezeichnung *Designation* | enthalten in *contained in* |
|---|---|---|---|---|---|
| X63 | FP BUCHSENLEISTE 96P CONNECTOR | 1051.5564.00 | ERNI | 594.833 | 1100.0908.01 |
| X71 | FP STECKERLEISTE 48P.GER CONNECTOR | 0386.6340.00 | AMP | 536514–2 | 1100.0908.01 |
| X72 | FP STECKERLEISTE 96P.GER. CONNECTOR | 1100.4410.00 | AMP | 2X536501–2 | 1100.0908.01 |
| X73 | FP STECKERLEISTE 96P.GER. CONNECTOR | 1100.4410.00 | AMP | 2X536501–2 | 1100.0908.01 |
| X74 | FP STECKERLEISTE 96P.GER. CONNECTOR | 1100.4410.00 | AMP | 2X536501–2 | 1100.0908.01 |
| X75 | FP STECKERLEISTE 96P.GER. CONNECTOR | 1100.4410.00 | AMP | 2X536501–2 | 1100.0908.01 |
| X81 | FP BUCHSENLEISTE 96P CONNECTOR | 1051.5564.00 | ERNI | 594.833 | 1100.0908.01 |
| X82 | FP STECKERLEISTE 48P.GER CONNECTOR | 0386.6340.00 | AMP | 536514–2 | 1100.0908.01 |
| X83 | FP BUCHSENLEISTE 96P CONNECTOR | 1051.5564.00 | ERNI | 594.833 | 1100.0908.01 |
| X91 | FP STECKERLEISTE 48P.GER CONNECTOR | 0386.6340.00 | AMP | 536514–2 | 1100.0908.01 |
| X92 | FP STECKERLEISTE 96P.GER. CONNECTOR | 1100.4410.00 | AMP | 2X536501–2 | 1100.0908.01 |
| X93 | FP STECKERLEISTE 96P.GER. CONNECTOR | 1100.4410.00 | AMP | 2X536501–2 | 1100.0908.01 |
| X101 | FP STECKERLEISTE 48P.GER CONNECTOR | 0386.6340.00 | AMP | 536514–2 | 1100.0908.01 |
| X110 | FP BUCHSENLEISTE 96P.WINK CONNECTOR | 6056.1746.00 | AMP | 536507–3 | 1100.0908.01 |
| X111 | FP STECKERLEISTE 96P.GER. CONNECTOR | 1100.4410.00 | AMP | 2X536501–2 | 1100.0908.01 |
| X200 | FP STECKERLEISTE 10P.GER CONNECTOR 10P | 0846.4593.00 | TYCO AMPDE | V23535–A2200–A102 | 1100.0908.01 |
| X201 | FJ EINBAUSTECKER F.GS SMB PLUG | 0063.5168.00 | IMS | 588.11.1510.001 | 1100.0908.01 |
| X202 | FJ EINBAUSTECKER F.GS SMB PLUG | 0063.5168.00 | IMS | 588.11.1510.001 | 1100.0908.01 |
| X203 | FJ EINBAUSTECKER F.GS SMB PLUG | 0063.5168.00 | IMS | 588.11.1510.001 | 1100.0908.01 |
| X204 | FJ EINBAUSTECKER F.GS SMB PLUG | 0063.5168.00 | IMS | 588.11.1510.001 | 1100.0908.01 |
| X205 | FP STIFTLEISTE 34P.COD. CONNECTOR | 1100.3788.00 | SAMTEC | STMM–117–02–G–D | 1100.0908.01 |
| X206 | FP STIFTLEISTE 34P.COD. CONNECTOR | 1100.3788.00 | SAMTEC | STMM–117–02–G–D | 1100.0908.01 |
| X207 | FP STIFTLEISTE 34P.COD. CONNECTOR | 1100.3788.00 | SAMTEC | STMM–117–02–G–D | 1100.0908.01 |
| X208 | FP STIFTLEISTE 34P.COD. CONNECTOR | 1100.3788.00 | SAMTEC | STMM–117–02–G–D | 1100.0908.01 |
| X209 | FP STIFTLEISTE 2P.R2.54 PIN CONNECTOR | 0010.7014.00 | | | 1100.0908.01 |
| X210 | FP STIFTLEISTE 3P.R2.54 PIN CONNECTOR | 0009.6101.00 | | | 1100.0908.01 |
| X211 | FP STECKERLEISTE 3P.GER CONNECTOR | 6014.4324.00 | J_S_T_DEUT | B3P–VH | 1100.0908.01 |
| X212 | FP BUCHSENLEISTE 10P.WINK CONNECTOR | 1091.2366.00 | MPE | BL22–47AGG–10 BZ0457 | 1100.0908.01 |
| X213 | FP STECKERLEISTE 50P.WIN CONNECTOR 50P. | 1051.4545.00 | BERG_ELEKT | 86453–550 | 1100.0908.01 |
| X214 | FP STIFTLEISTE 50P.COD. | 1100.3794.00 | SAMTEC | STMM–125–02–G–D | 1100.0908.01 |




Für diese Unterlage behalten wir uns alle Rechte vor.
*For this document all rights reserved*

| el. Kennz. *Part* | Benennung *Designation* | Sachnummer *Stock No.* | Hersteller *Manufacturer* | Bezeichnung *Designation* | enthalten in *contained in* |
|---|---|---|---|---|---|
| | CONNECTOR | | | | |
| X215 | FP STIFTLEISTE 34P.COD. CONNECTOR | 1100.3788.00 | SAMTEC | STMM–117–02–G–D | 1100.0908.01 |
| X216 | FP STIFTLEISTE 34P.COD. CONNECTOR | 1100.3788.00 | SAMTEC | STMM–117–02–G–D | 1100.0908.01 |
| X217 | FP STIFTLEISTE 34P.COD. CONNECTOR | 1100.3788.00 | SAMTEC | STMM–117–02–G–D | 1100.0908.01 |
| X218 | FP BUCHSENLEISTE 26P.ZIF CONNECTOR | 1091.2137.00 | MOLEX | 52030–2610 | 1100.0908.01 |
| X219 | FP STIFTLEISTE 50P.COD. CONNECTOR | 1100.3794.00 | SAMTEC | STMM–125–02–G–D | 1100.0908.01 |
| X220 | FP STIFTLEISTE 2P.R2.54 PIN CONNECTOR | 0009.5992.00 | | | 1100.0908.01 |
| X221 | FJ EINBAUSTECKER F.GS SMB PLUG | 0063.5168.00 | IMS | 588.11.1510.001 | 1100.0908.01 |
| X222 | FP STIFTLEISTE 34P.COD. CONNECTOR | 1100.3788.00 | SAMTEC | STMM–117–02–G–D | 1100.0908.01 |
| X223 | FP STIFTLEISTE 50P.COD. CONNECTOR | 1100.3794.00 | SAMTEC | STMM–125–02–G–D | 1100.0908.01 |
| X224 | FP STIFTLEISTE 50P.COD. CONNECTOR | 1100.3794.00 | SAMTEC | STMM–125–02–G–D | 1100.0908.01 |
| X225 | FP STIFTLEISTE 4P.R2.54 PIN CONNECTOR NICHT BESTUECKT | 0009.8462.00 | | | 1100.0908.01 |
| X250 | FM BUCHSENLEISTE 15P. HD CONNECTOR | 1091.2189.00 | AMP | 216281–1 | 1100.0908.01 |
| X251 | FM STECKERLEISTE 9P.WRAP CONNECTOR | 0614.3777.00 | FCT | F09P4G1 | 1100.0908.01 |
| X252 | FM STECKERLEISTE 9P.WRAP CONNECTOR | 0614.3777.00 | FCT | F09P4G1 | 1100.0908.01 |
| X253 | FM BUCHSENLEISTE 25P.WRAP CONNECTOR 25P. | 0680.2375.00 | FCT | F25S4G1 | 1100.0908.01 |
| X254 | FO EINBAUBUCHSE 6P.F.GS CONNECTOR | 1100.3871.00 | YAMAICHI | MDIN06K | 1100.0908.01 |
| X255 | FM BUCHSENLEISTE 24P.F.GS CONNECTOR | 1091.2237.00 | AMP | 554501–2 | 1100.0908.01 |
| X301 | FM STECKERLEISTE 9P.WRAP CONNECTOR | 0614.3777.00 | FCT | F09P4G1 | 1100.0908.01 |
| X302 | FM STECKERLEISTE 9P.WRAP CONNECTOR | 0614.3777.00 | FCT | F09P4G1 | 1100.0908.01 |
| X303 | FM BUCHSENLEISTE 15P. HD CONNECTOR | 1091.2189.00 | AMP | 216281–1 | 1100.0908.01 |
| X304 | FM BUCHSENLEISTE 9P.WRAP CONNECTOR | 0614.3760.00 | FCT | F09S4G1 | 1100.0908.01 |
| X305 | FJ EINBAUSTECKER F.GS SMB PLUG | 0063.5168.00 | IMS | 588.11.1510.001 | 1100.0908.01 |
| X306 | FJ EINBAUSTECKER F.GS SMB PLUG | 0063.5168.00 | IMS | 588.11.1510.001 | 1100.0908.01 |
| X307 | FJ EINBAUSTECKER F.GS SMB PLUG | 0063.5168.00 | IMS | 588.11.1510.001 | 1100.0908.01 |
| X308 | FJ EINBAUSTECKER F.GS SMB PLUG | 0063.5168.00 | IMS | 588.11.1510.001 | 1100.0908.01 |
| X450 | FM BUCHSENLEISTE 9P.WRAP CONNECTOR | 0614.3760.00 | FCT | F09S4G1 | 1100.0908.01 |
| X451 | FM BUCHSENLEISTE 9P.WRAP CONNECTOR | 0614.3760.00 | FCT | F09S4G1 | 1100.0908.01 |
| X452 | FM BUCHSENLEISTE 15P. HD CONNECTOR | 1091.2189.00 | AMP | 216281–1 | 1100.0908.01 |
| X453 | FM BUCHSENLEISTE 15P. HD | 1091.2189.00 | AMP | 216281–1 | 1100.0908.01 |



For this document all rights reserved

| el. Kennz. *Part* | Benennung *Designation* | Sachnummer *Stock No.* | Hersteller *Manufacturer* | Bezeichnung *Designation* | enthalten in *contained in* |
|---|---|---|---|---|---|
| | CONNECTOR | | | | |
| X454 | FM BUCHSENLEISTE 15P. HD CONNECTOR | 1091.2189.00 | AMP | 216281–1 | 1100.0908.01 |

Für diese Unterlage behalten wir uns alle Rechte vor
*For this document all rights reserved*

# Index


## A

ADC Module1 (DIGITAL Board) ..... 3.12
Adjustment
  + 5 VDC Reference Voltage ..... 2.2
  10 MHz Reference-Frequency ..... 2.3
  Automatic of Module Data ..... 2.4
AUC Module1 (DIGITAL Board) ..... 3.13
AUDIO-GEN. + ANA., CMU-B41 ..... 3.15
Auxiliary means ..... 1.2

## B

Block diagram ..... 3.2

## C

CDMA (IS95) Signalling Unit ..... 3.16
Circuit documents (basic unit) ..... 5.3
CMU-B11 (Option) ..... 4.5
CMU-B12 (Option) ..... 4.5
CMU-B15 (Option) ..... 4.5
CMU-B21 ..... 3.13
CMU-B21 (Option) ..... 4.6
CMU-B41 ..... 3.15
CMU-B41 (Option) ..... 4.6
CMU-B52 (Option) ..... 4.6
CMU-B81 ..... 3.16
CMU-K21 (Option) ..... 4.6
CMU-U61 (Option) ..... 4.6
Cooling the instrument ..... 3.4

## D

DDC Module1 (DIGITAL Board) ..... 3.12
DIGITAL Board ..... 3.12
Documents ..... 5.1
Drawing of all CMU spare parts ..... See annex
DSP Module (UNIV. SIGN. Unit) ..... 3.14

## F

Fan ..... See cooling the instrument
FLOPPY DISK DRIVE (Software Update) ..... 4.1
FRONT Module ..... 3.5
FRONTPANEL Board ..... 3.7
Function test with Mobile Stations ..... 1.17

## H

Hard disk (FRONT Module) ..... 3.5

## I

Instrument design ..... 3.1
Instrument frame ..... 3.3
Interface test
  IEC bus ..... 1.8
  RS-232 ..... 1.8
IQOUT Module (UNIV. SIGN. Unit) ..... 3.14

## L

LCD (FRONT Module) ..... 3.5
Loudspeaker ..... 3.3

## M

Manual Test Procedure ..... 1.7
Maximum distortion ..... 1.13
Measuring instruments ..... 1.2, 1.8
Module replacement
  ADC Module1 ..... 3.42
  AUC Module1 ..... 3.42
  DDC Module1 ..... 3.42
  DIGITAL Board ..... 3.41
  DSP Module0/1 ..... 3.46
  FLOPPY Disk Drive CMU-B61 ..... 3.35
  FRONT Module ..... 3.17
  FRONT Module Controller ..... 3.19
  FRONTPANEL Board ..... 3.52
  Hard Disk ..... 3.25
  Instrument fan ..... 3.50
  IQOUT Module ..... 3.46
  Keyboard Membrane ..... 3.32
  Labeling Panel ..... 3.34
  LCD ..... 3.30
  Lithium Battery ..... 3.22
  Mat ..... 3.32
  Memory Modules ..... 3.28
  Motherboard ..... 3.51
  Motherboard1 ..... 3.51
  Motherboard2 ..... 3.52
  Option AUDIO-GEN. + ANA. CMU-B41 ..... 3.48
  Option OCXO REFERENCE OSC. ..... 3.44
  Option SPEECH CODEC ..... 3.46
  PCMCIA Interface CMU-B62 ..... 3.35
  POWER SUPPLY ..... 3.49
  REARPANEL Board1 ..... 3.53
  REARPANEL Board2 ..... 3.53
  REFERENCE Board ..... 3.38
  RF Frontend ..... 3.37
  RXTX Board1 ..... 3.39
  TR-CORRECTION Module ..... 3.40
  TXDSP Module1 ..... 3.42
  UNIVERSAL SIGNALLING Unit ..... 3.45
Motherboard ..... 3.7
Motherboard1 ..... 3.7
Motherboard2 ..... 3.7

## N

Netclock generation ..... 3.8

## O

OCXO
  Adjustment ..... 2.3
  REFERENCE OSC. CMU-B11 or B12 (Option) ..... 3.9
Options
  Installing ..... 4.4
  List ..... 4.4
Overtemperature protection (POWER SUPPLY) ..... 3.6

## P

PCMCIA INTERFACE (Software Update) ..... 4.1
Performance Test ..... 1.1
Power cables ..... 5.2
Power Factor Correction (PFC, POWER SUPPLY) ..... 3.6
POWER SUPPLY ..... 3.6

POWERGOOD signal (POWER SUPPLY) ..... 3.6

## R

REARPANEL Board1 ..... 3.7
REARPANEL Board2 ..... 3.8
REFERENCE Board ..... 3.8
Reference frequencies ..... 1.8
Repair ..... 3.1
RF Frontend ..... 3.9
RX Dynamic / average noise level ..... 1.15
RX GSM Demodulation ..... 1.16
RX Harmonics ..... 1.13
RX Power meter (Frequency selective) ..... 1.13
RX Power meter (Wideband) ..... 1.13
RX Residual FM/AM ..... 1.15
RX Spurious response / image rejection ..... 1.14
RX SSB Phase Noise ..... 1.14
RXTX Board1 ..... 3.10

## S

Selftest ..... 1.7
Software Update
  New installation ..... 4.1
  Performing ..... 4.2
  Reinstalling the Old Software ..... 4.3
Spare parts (order) ..... 5.1
SPEECH CODEC (UNIV. SIGN. UNIT) ..... 3.14
Spinwheel (FRONT Module) ..... 3.5
STANDBY circuit (POWER SUPPLY) ..... 3.6
STANDBY/ON signal (POWER SUPPLY) ..... 3.6

## T

TCXO
  Adjustment ..... 2.3
  Function ..... 3.8
Test report ..... 1.18
Tolerance analysis ..... 1.6
Troubleshooting
  General errors ..... 3.61
  using the error messages ..... 3.60
  using the INFO Menu for Modules ..... 3.58
  using the LEDs ..... 3.55
  using the SELFTEST Menu for Modules ..... 3.57
TX carrier/sideband suppression ..... 1.13
TX Frequency Accuracy ..... 1.10
TX Frequency settling time ..... 1.10
TX GSM Modulation ..... 1.16
TX Harmonics ..... 1.11
TX Level Error ..... 1.10
TX Level Settling time ..... 1.11
TX Nonharmonics ..... 1.11
TX Residual AM ..... 1.12
TX Residual FM ..... 1.12
TX SSB Phase Noise ..... 1.12
TXDSP Module1 (DIGITAL Board) ..... 3.13

## U

Universal Signalling Unit ..... 3.13
Update (software) ..... 4.2

## V

VersionManager (loading) ..... 4.3
VSWR ..... 1.10

T

U

V